M1-M4 AND S1 S4
DN 100 FLANGED

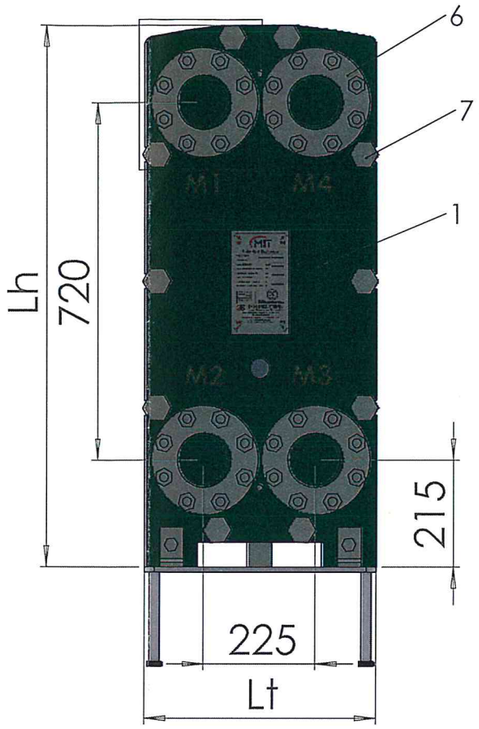

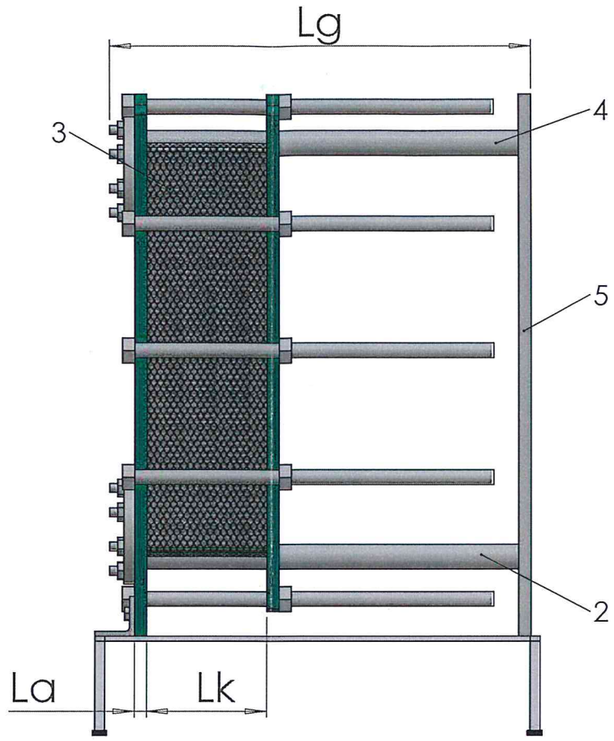

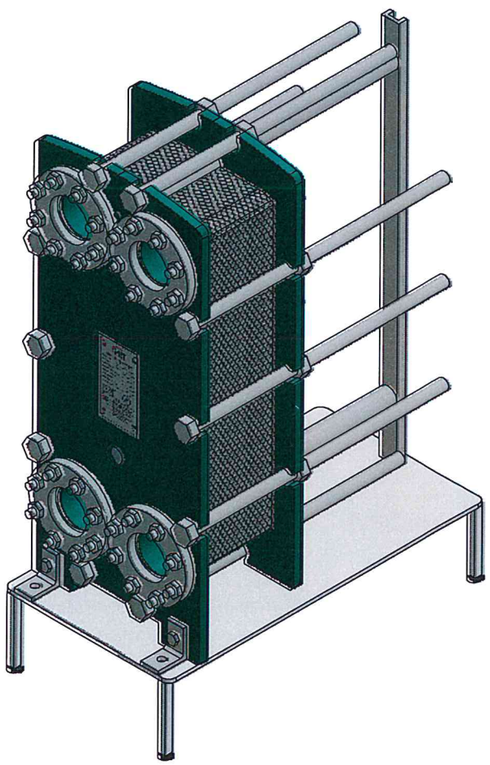

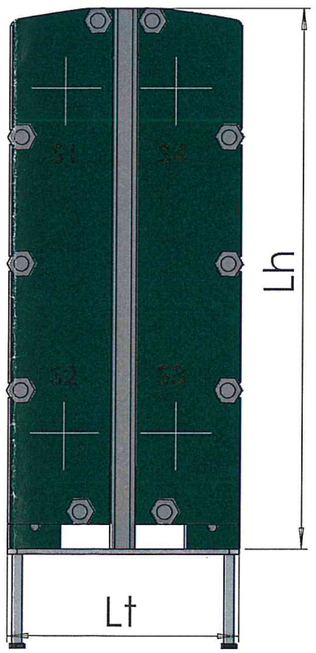

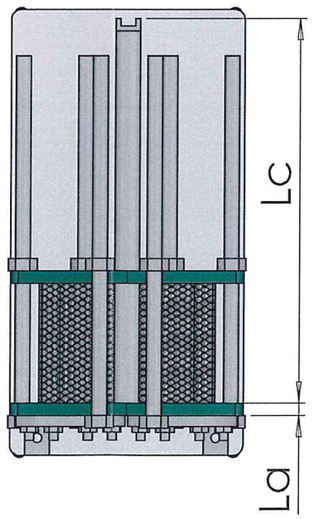

PART NO	PART NAME	PART SPECIFICATION		
1	FRAME PLATE	ST37-ST52 Painted (RAL5018)		
2	GUIDING BAR	ST37-ST52 Galvenized		
3	MIT PLATE	AISI 316L / TITANIUM / HASTELLOY		
4	CARRYING BAR	ST37-ST52 Galvenized		
5	SUPPORTING COLUMN	ST37-ST52 Galvenized		
6	CONNECTION	DN100		
7	TIGHTENING BOLT	Galvenized Bolt		
		PN10	PN16	PN25
		M30	M30	M30

MIT CARRYING BAR LENGHT

NUMBER OF PLATE	LENGHT (Lc)
0-25	250 mm
25-50	350 mm
50-75	500 mm
75-100	750 mm
100-150	1000 mm
150-200	1250 mm
200-300	2000 mm
300-400	2500 mm

Symbol used on drawing	Scaling Dimension (mm)
Lh (Total height)	1098
Lg (Total wight)	La + Lc+ 75 mm
Lt (Width of frame)	470
Lk : N*(2,6 + X)	N: Number of Plates
	X: Thickness of Plate

NO	Connection	Type of connection	DN	La	Bar
M1	Hot in	Flanged	100	25	10
M2	Hot out	Flanged	100	35	16
M3	Cold in	Flanged	100	45	25
M4	Cold out	Flanged	100		

Revision by	Date	Designed by	Date
HKO	01-05-2009	HKO	01-05-2009
Revision No	**02**	**Approved by**	**Date**
		OZC	21-07-2010

Revision Text	Dimensions without tolerance	ISO projektion
CHANGED CARR. BAR	ISO 2768-m	

Drawing No	Pressure Vessel Code
M521-3128231654	PED 97/ 23 / EC module H1

EKİN ENDÜSTRİYEL
Isıtma - Soğutma San. Tic. Ltd. Şti.

MODEL	
521	A3
SCALE 1:10	SHEET 1/1