CIRCUIT BREAKERS TYPE HK, HL, HG INSTRUCTIONS FOR STORING, INSTALLATION AND MAINTENANCE

ELEKTROTECHNICKÉ ZÁVODY
JULIA FUČÍKA, N. P., 658 67 BRNO
EXPORTED BY: ZSE, G. Ř.,
BLANICKÁ 28, 120 61 PRAHA 2

I. STORING

1. Survey of circuit breakers
2. Storing

II. INSTALLATION AND PUTTING INTO OPERATION

1. Transport
2. Seating and anchoring the circuit breaker
3. Connection of circuit breakers
4. Insulating oil
   4.1 Oil characteristics
   4.2 Checking the dielectric strength of oil
5. Putting into operation

III. MAINTENANCE

A. HK circuit breakers

1. Table of recommended maintenance terms
2. Maintenance of parts being in contact with arc
   2.1 Calculation of oil insulating strength
   2.2 Number of permissible breaking operations
   2.3 Dismantling and inspection of circuit breaker
   2.4 Assembling the circuit breaker after inspection
3. Adjusting and inspection of circuit breakers
   3.1 Adjusting the contact pin
   3.2 Checking the contact pin travel
   3.3 Checking the contact pin engagement
4. Replacement of other parts
   4.1 Replacement of electromagnet coils
   4.2 Replacement of scraper ring
   4.3 Replacement of inspection hole and float oil level gauge
5. Oil exchange
   5.1 Oil discharge
   5.2 Oil filling of poles
6. Spare parts
   6.1 Spare parts for circuit breaker
   6.2 Spare parts for drive

B. HL circuit breaker

1. Table of recommended maintenance terms
2. Maintenance of parts being in contact with arc
   2.1 Number of permissible breaking operations
   2.2 Checking the oil insulating strength
3. Dismantling and replacing the worn off parts
   3.1 Dismantling the upper pole part
   3.2 Dismantling the upper contact rose
   3.3 Dismantling the arcing contact shoe and switching pin
   3.4 Dismantling the arc chute
4. Assembling the pole after a revision
5. Oil exchange
   5.1 Oil discharge
   5.2 Oil filling
6. Spare parts

C. GH circuit breaker

1. Table of recommended maintenance terms
2. Maintenance of parts being in contact with arc
   2.1 Number of permissible breaking operations
   2.2 Checking the oil insulating strength
3. Dismantling and replacement of worn off parts
   3.1 Dismantling the upper pole part and contact rose
   3.2 Dismantling the arcing contact shoe of switching pin
   3.3 Dismantling and inspection of arc chute
4. Inspection of parallel pole
5. Assembling after a revision
6. Oil exchange
   6.1 Oil discharge
   6.2 Oil filling
7. Spare parts

D. BLR, BLRM drives

1. Inspection before putting into operation
2. Maintenance
   2.1 Replacement of magnet coils
   2.2 Under-voltage coil
3. Spare parts

I. STORING

1. Checking the circuit breaker in case of survey

Circuit breakers must always be transported, stored and installed in vertical position, because their poles are filled with oil. Taking over the circuit breakers it is necessary to check whether they are not damaged due to transport, and whether the correct level of oil has been kept in all poles. In case of sea transport, the dielectric value of oil must be checked, too.

2. Storing

When complete circuit breakers (e.g. spare ones) are stored for a longer period of time, it is necessary to store them filled with oil in vertical position. The poles must be filled with oil, as is presence protects the inner insulation against moistening due to temperature changes. PVC sheet covering the upper part of the pole prevents the penetration of dust and mechanical impurities into air vents, and for this reason the covering must not be removed from insulating parts. Stored-energy drive must be also protected by means of suitable cover (PVC foil). In such a way the impurity deposits on lubricated parts and their penetrating into ball or roller bearings of moving parts is prevented. The scoring of insulating cylinders must also be prevented, as they are painted by special insulating varnish.

Circuit breakers can be stored solely in dry, aerated and safe room in which the temperature differencies are low. The temperature at the pace of storing must not drop bellow −10 °C. In any case the circuit breakers must not be stored in the proximity of cement, lime, accumulator batteries and other chemicals used on building sites.

The dielectric value of oil must be checked after a long-term storage, or when the storing instructions were not followed.

II. INSULATION AND PUTTING INTO OPERATION

HK, HL and HG low-oil-content circuit breakers are intended for indoor installation into substations. They can be installed in rooms with finished building works and without damage risk, in dry and dust-free spaces.

When HK circuit breakers are of wall-mounted and/or frame-mounted types, they are fixed by means of holes drilled into the side plate of the base frame. The vertical mounting position must be secured before the final tightening of the primary relay, if any, of the circuit breaker is set in the factory, and the change of insulating rod length is not allowed. There is no need of lubrication of the rod pivot.

Requirements for installing the circuit breakers in IRODEL boxes are stated in instructions valid for these boxes.

1. Transport

Circuit-breakers are delivered with oil filling, and therefore they must be transported in vertical position only. During the transport the circuit breakers must not by bound in insulating poles, epoxy resin bushings with draw-out contacts a.s.o. The holes designed for the transport are marked. During the transport the vertical position must be secured, the permissible deviation being for HG circuit breakers 30° and for HG 3-8/4000 circuit breakers 10°. Suspension ropes must not lean against the poles, or circuit breaker drives. On their own truck, the circuit breakers can be moved for short distances only. The floor must be flat and the force for movement must not be done through the poles.

2. Seating and anchoring the circuit breakers

Circuit breakers must be installed on a horizontal base and anchored by means holes drilled in partitions of truck.

3. Connection of the circuit breaker

Before the connection of circuit breaker the anchoring pins must be greased by contact vaseline. The earthing of circuit breaker must be carried out according to the instructions.

4. Insulating oil

4.1 Oil characteristics

Low-oil-content circuit breakers are delivered with poles filled with BTS transformer oil according to ČSN 65 6845 Standard. Before filling the circuit breaker, the dielectric strength must correspond to the values stated in the following table. These values are stated according to the testing equipment.

Table 1

Standard	Shape of electrodes	Electrode distance	Breakdown values	Breakdown time
ČSN 34 6432	Sphere dia. 20 mm	3 mm	50 kVeff	5 kV/s
SEV No. 124-1929	Sphere dia. 12,5 mm	5 mm	60 kVeff	
GOST 982-56	disk dia. 25 mm	2,5 mm	40 kVeff	
VDE 0370/7.52	Spherical cap dia. 25 mm	2,5 mm	40 kVeff	Breakdown in cca 20 s

4.2 Chek of oil dielectric strength

By means of oil dielectric strength can be determined if the oil does not contain the non-permissible amount of water, carbon and other impurities.

The period of check or oil exchange is given by the number of breaking operations and by the value breaking current; it corresponds to the instructions for maintenance of parts being in contact with arc.

The dielectric strength is checked once a year in the case of a very small number of breaking operations, or when the circuit breakers are mostly in closed position.

Table 2 – Values of breakdown voltage

Testing according to Standard	Breakdown voltage of oil	
	complying with the service	necessity of exchange
ČSN 34 6432	35 kVeff	14 kVeff
SEV No. 124-1929	40 kVeff	10 kVeff
GOST 982-56	25 kVeff	8 kVeff
VDE 0370/7.52	25 kVeff	8 kVeff

Sampling the oil for test, the amount of 1/2 l must be drawn off on account of removing the impurities deposited on pole bottom.

5. Putting into operation

Before energizing the circuit breaker, the following must carried out:

- to clean the circuit breaker and to check the passage of vent holes on the cover of the arc chute
- to check the LV and HV connections
- to check the height of oil level (after preceding measurement of its insulating properties)
- to inspect the correct anchoring
- to check ot, if needed, to clean the energy-stored drive. The first energizing of energy-stored mechanismus has to be carried out by means of a handle, making and breaking operation by means of a hand control
- to check the working voltage of the motor, and to control coils before their connection to the control voltage
- these operations having been carried out, the drive can be chacked by means of the motor (in case of BLRM drive) and the remote control by means of closing, opening or no-voltage coil
- if the circuit breaker is equipped with no-voltage magnet core it is necessary to lock the magnet core in the upper position for the test without control voltage and the test being over to release it
- the accidental defects being removed, the circuit breaker can be connected to the high voltage
- other opeartions can be carried out according to the valid service and safety instructions.

HK CIRCUIT BREAKER

HK

Circuit breaker pole

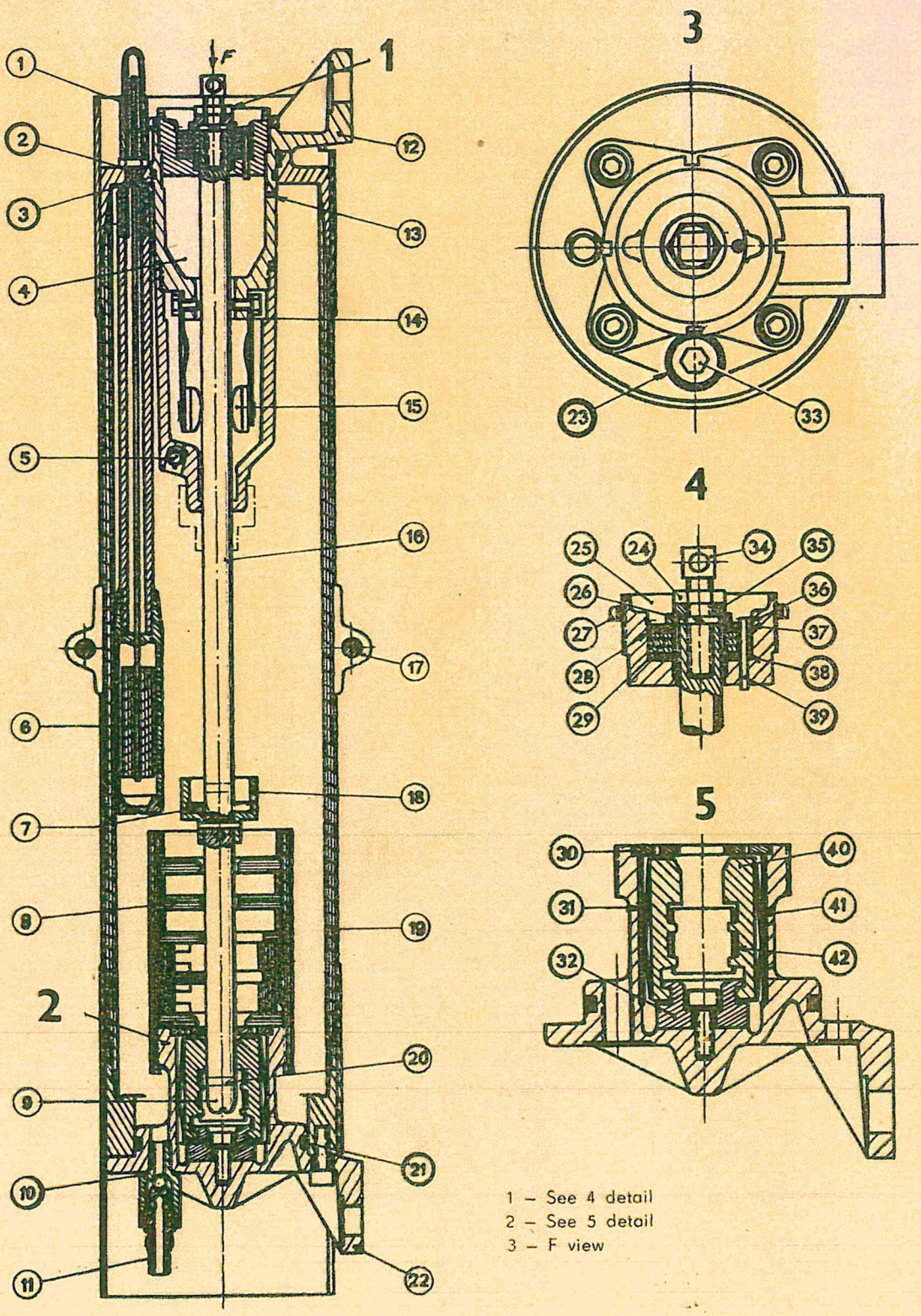

Fig. 1

Circuit breaker closed – the spring is partly energized

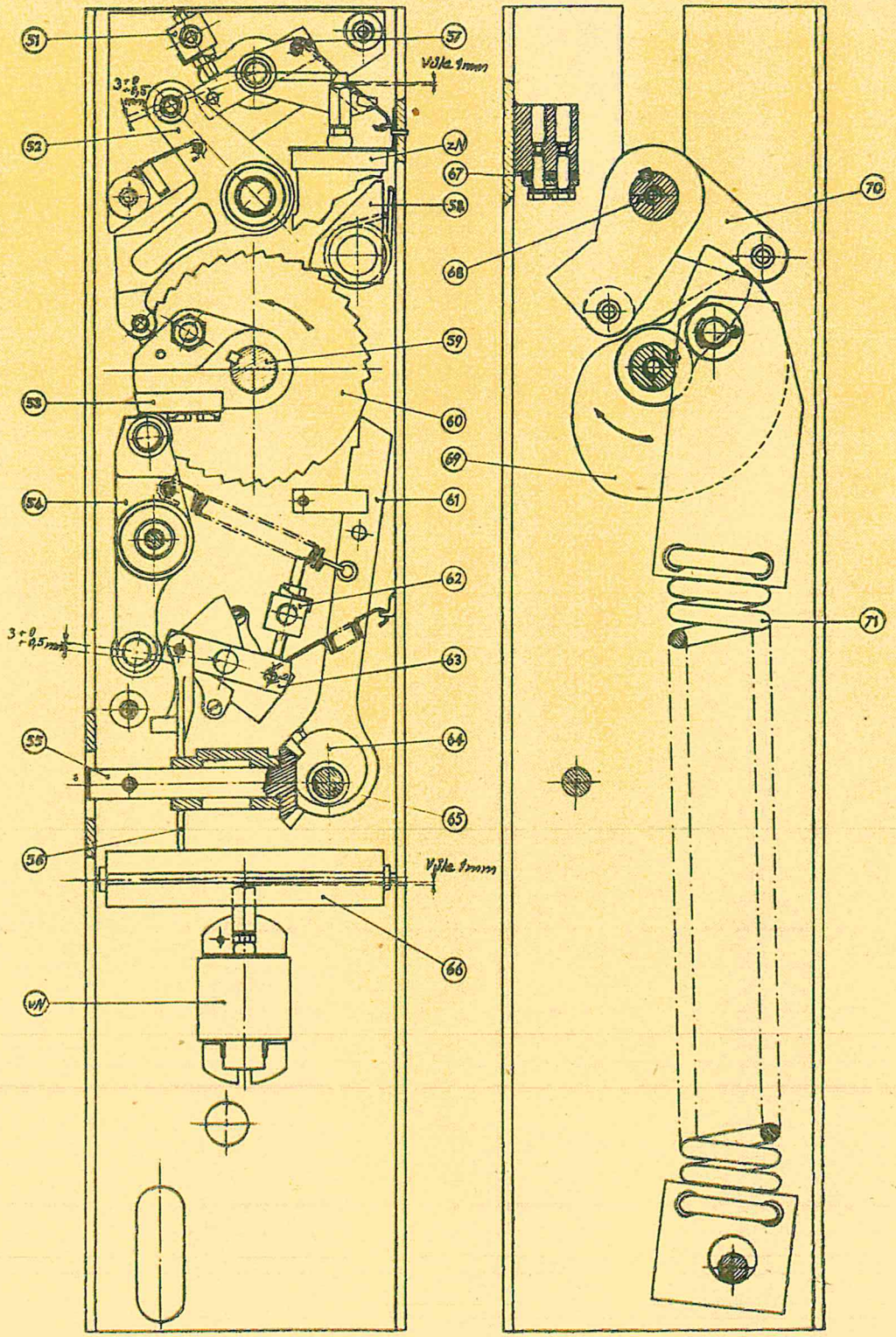

View on energizing mechanism

View on spring

Fig. 2

III. MAINTENANCE

A. HK circuit breakers

Description to Fig. 1, 2

1. Oil level gauge window (6)
2. Packing ring of the window (1)
3. Packing ring of the terminal
4. Expansion space
5. Globe valve
6. Float oil level gauge
7. Elastic stop of damper at breaking operation
8. Arc chute
9. Arcing tip of the contact pin
10. Packing ring for oil discharge hole
11. Oil discharge hole
12. Upper terminal-holder of contact finger (15)
13. Nozzle for gas leakage (1 hole)
14. Damper of breaking operation
15. Upper contacts (6 pcs)
16. Contact pin
17. Pole sleeve
18. Damper cylinder of breaking operation
19. Pole tube
20. Ring of the tip
21. Packing ring of bottom terminal
22. Bottom terminal
23. Plug packing for oil filling
24. Safety nut
25. Plug of expansion space
26. Lock washer
27. Safety nut
28. Upper washer of the damper for making operation
29. Lock washers of damper (3 pcs.)
30. Arcing plate (contact cover)
31. Insulation insert
32. Holder of bottom contacts
33. Plug of filling hole
34. Hinge of rod
35. Screw stop
36. Safety ring
37. Shim
38. Scraper ring
39. Nozzle for de-aeration
40. Bottom contact (6 pcs)
41. Contact spring
42. Distance tube
43. Connection rod
44. Insulating arm
45. Pivot
51. Holder for rest set (57)
52. Lever for stop catcher (53) in energized position (stretched in open position of circuit breaker and with non-stretched spring)
53. Making stop (stretched in closed position of circuit breaker)
54. Lever for stop catcher (53) in closed position
55. Shaft of hand energizing
56. Opening rod
57. Lever rest (52)
58. Stop for securing the ratchet wheel return (60)
59. Shaft of the spring
60. Ratchet wheel
61. Energizing stop
62. Holder for rest sext (63)
63. Lever rest (54)
64. Eccentric pivot
65. Shaft
66. Lever of tripping magnets
67. Lever stop (70) at breaking operation
68. Shaft of circuit breaker
69. Control cam of lever
70. Control lever of circuit breaker shaft
71. Spring (for closing and opening)

Low-oil-content circuit breaker typ HK 4-6B, 630A, DELLE-licence

393 0250

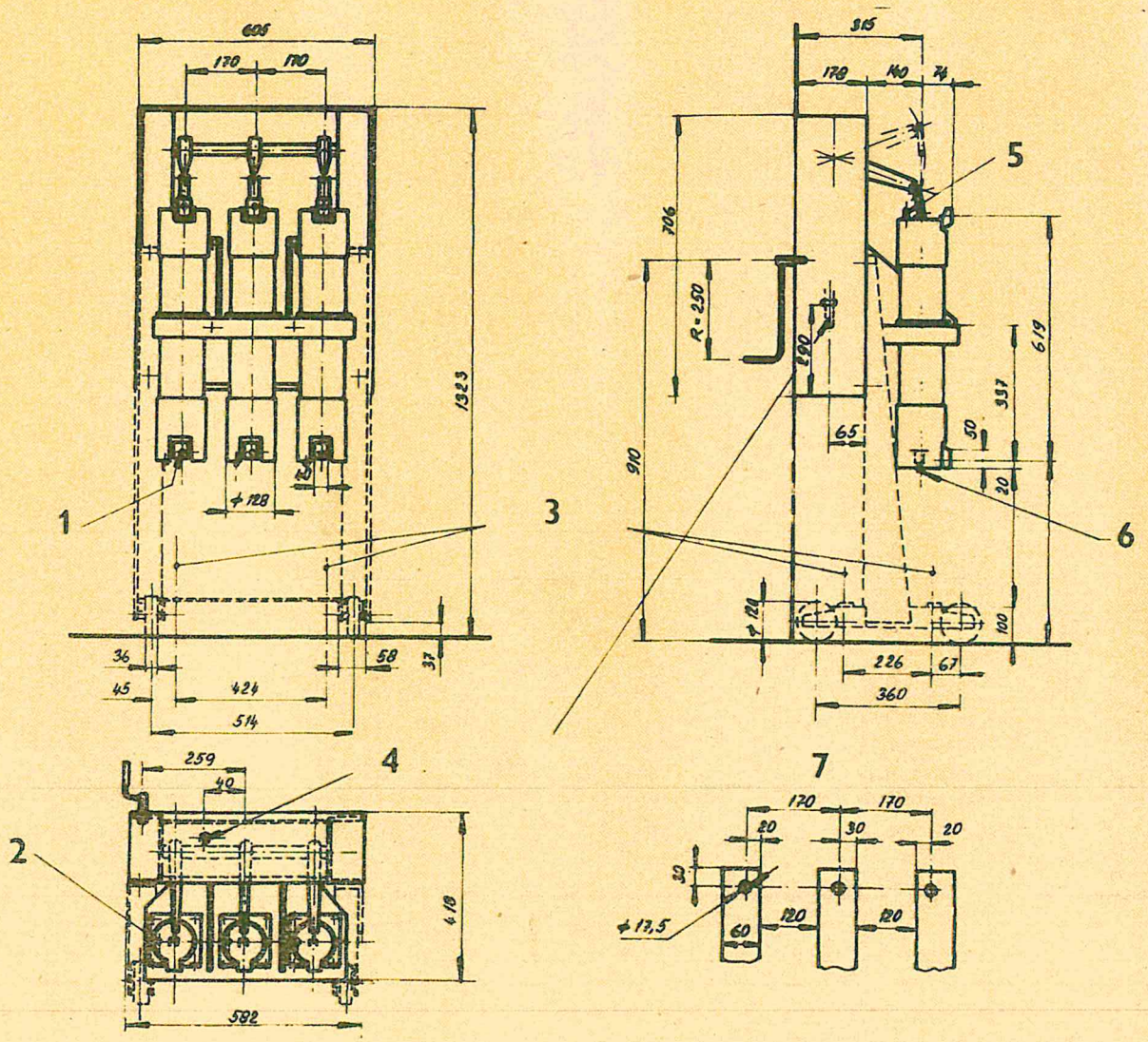

1 – Hole diam. 17,5
2 – Filling screws
3 – 4 holes dia. 17,5
4 – Supply to the pneumatic drive
5 – Oil level
6 – Exhaust valve
7 – Lay out of connect. bais

Fig. 3

Wiring diagram

493 1320

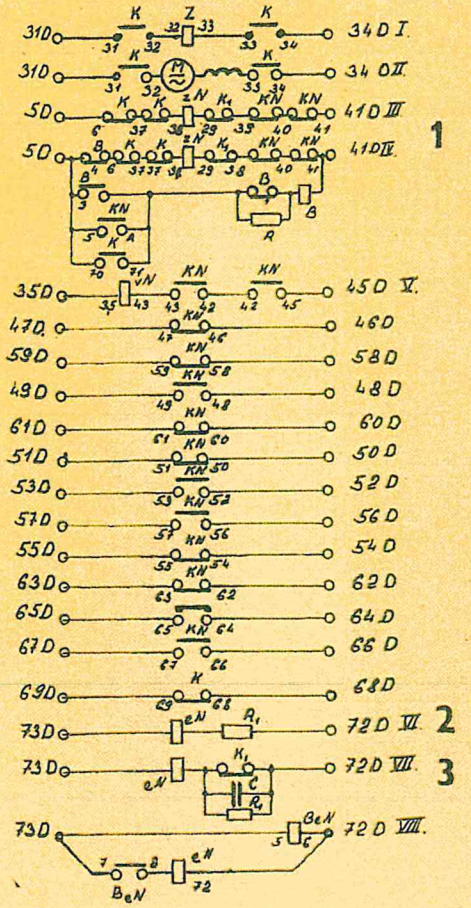

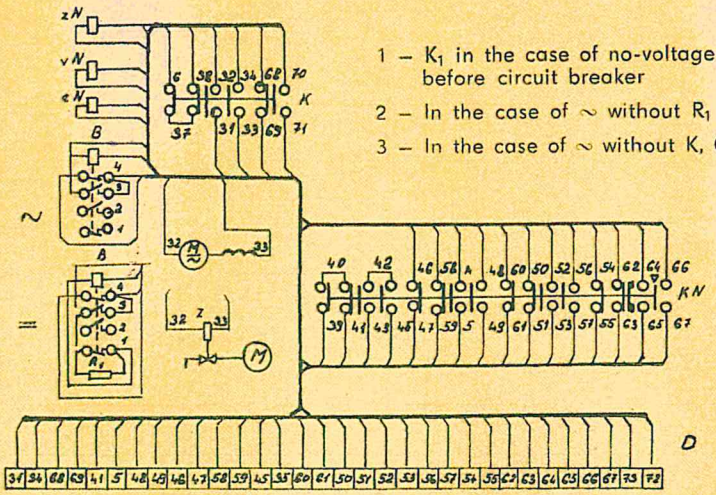

1 – K_1 in the case of no-voltage coil before circuit breaker

2 – In the case of ∼ without R_1

3 – In the case of ∼ without K, C, R

I. Control by means of pneumat. drive with electromagnetic valve DC or AC coil

II. Control by DC or AC el. motor

III. Closing coil circuit for hand drive

IV. Closing coil circuit for motor drive

V. Opening coil circuit

VI. No-voltage coil circuit in the case of connection behind the circuit breaker

VII. No-voltage coil circuit in the case of connection in front of the circuit breaker

VIII. No-voltage coil circuit of HK 4-6 B circuit breaker

2N closing coil
VN opening coil
eN no-voltage coil
M el. motor
M pneumat. motor
Z control valve
B anti-pumping relay

K auxiliary switch of the motor
KN signal contacts of circuit breaker
D terminal board
BeN relay for no-voltage coil
R_1 resistance of no-voltage coil
R_2 resistance of RP 30 relay

Fig. 4

1. Table of recommended maintenace terms

Table 3

Work	Once in a year	For 1000 breaking	
Cleaning the apparatus	×		– Insulating cylinder (19) – Nozzle for de-aeration (39) Primary overcurrent release and insulating rod. In case of installing the apparatus in dusty atmosphere the cleaning must be carried out in shorter time intervals.
Lubrication of mechanism	×		Petrol or kerosene can be used for removing impurities. The parts must be wiped off by means of clean and dry rag. The pivots and chain gearings are to be lubricated by PP 90 oil (class SAE 90); shaft bearings, pivots of rollers, pivots in levers and rods and reverse springs by neutral vaseline oil. There is no need of lubricating the pins of insulating rods of overcurrent release drives.
Check of mechanism	×		Tightening the nuts and screws of HV and LV circuits – inspection of motor brushes – check of dowelled joints on levers, rods and tightening of screws and nuts – correct operation check of auxiliary switches and relays.
Check of parts being in contact with arc	×	×	Check terms are dependent on the number of short circuit current breaking operations, on its value and frequency of operations. The cl. 2.1 and 4.2 must be followed.
Check of oil quality	×	×	

2. Maintenance of parts being in contact with arc

Following parts must be inspected in each pole:

- bottom contact (40)
- arcing plate (30)
- arcing tip (9)
- arc chute (8)

2.1 Insulation oil level.

Table 4 – Number of permissible breaking operations before inspection

Number of short-circuit current break	At load
4×15,7 kAeff	800×630 A
5×14,5 kAeff	1000×400 A
14× 7,2 kAeff	

Wearing limits of parts are done by dimension given in the following figure.

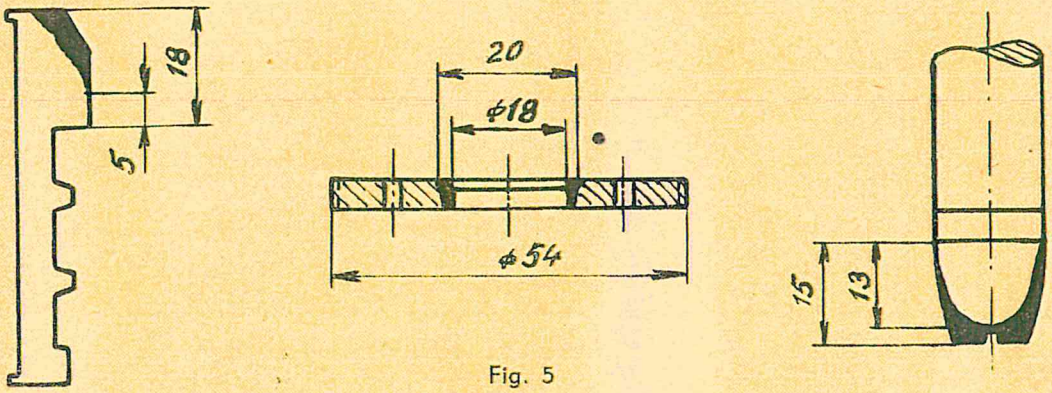

Fig. 5

It is necessary to state that the data of switching operation number are not fully exact; therefore it is recommended to check the contact condition during revision and to follow the stated wearing limit according to the figure 5.

2.2 Check of oil insulating strength

The check of dielectric strength of oil must be carried out according to the cl. 4.2 after breaking operations at current value and number given in table of cl. 2.1. The lower permissible limit of dielectric strength is 50 kV/

/cm. It can be supposed than the oil is debased sooner than contacts in the case of load breaking up to rated current, and the contacts must be exchanged sooner than the oil in the case of short-circuit current breakings.

2.3 Dismantling and inspection of circuit breaker

- circuit breaker must be isolated from any possible supply and the working place must be arranged according to ČSN 34 3100 Standard. In the case of work in draw-out boxes the circuit breaker must be drawn out of the box – the instruction for drawing-out are given in instruction book for IRODEL boxes
- in the case of remote control the control voltage for energizing electromagnets and the motor must be disconnected. The control voltage being disconnected at closed circuit breaker, the cycle O - C - O for releasing the spring must be carried out by hand by means of control lever
- during all dismantling works, the parts including screws must not be exchanged between circuit breaker poles
- dismantling the upper and lower connecting bars, or in the case of draw-out design dismantling the insulating draw-out contacts
- oil drawing off from poles by means of oil discharge hole (11)
- dismantling the bottom terminal (22)
- taking out the outlet set including the arc chute
- screwing together the arc chute (arc chute can be fixed in vice gripping jaws of which are lined by rag and moved round a slight amount by means of lever borne on terminal). Arc chute cannot be dismantled
- screwing together the arcing plate (30) (two holes dia. 2,5 mm, spacing 35 mm)
- bottom contacts (40) being taken out, the holder (32) can be released from bottom terminal (22) (M8 screw according to ČSN 02 1143 Standard)
- detaching the contact pins (16) from insulating arms (44) by means of taking out the pin (45) and dismantling the upper terminal (12)
- taking out the whole set frome the pole and inspection of arcing tip
- removing the arcing tip (9) the contact pin can be fixed in vice gripping jaws of which are lined e.g. by copper for preventing the scratching the contact pin
- all these operations must be carried out successively on individual poles to prevent the exchange of parts.

2.4 Assembly of the circuit breaker after inspection

Assembly operation must be carried out in converse succession:

- screwing on the new arcing tip (9); the releasing must be prevented by means of centre punch and the transition tip-contact pin must be finished
- to make sure whether the insulation insert (31) does not overlap the deaeration hole drilled in holder (22)
- to change the contact finger only with small contact surface and to clean the burnings at remaining contacts
- to secure the assembled contact fingers (40) with springs (41) on holder (32) by means of rubber ring before their placing into body (22). Inserting the contact assembly into body the rubber ring must be removed

Attention – the direction of blown-out channel must be kept according to Fig. 6. Clearance of tightening must be taken up by means of insulating washer

- packing ring (3 and 21), with enlarged diameter or damaged surface must be changed
- to fill the poles of circuit breaker by oil.

Assembling the are chute

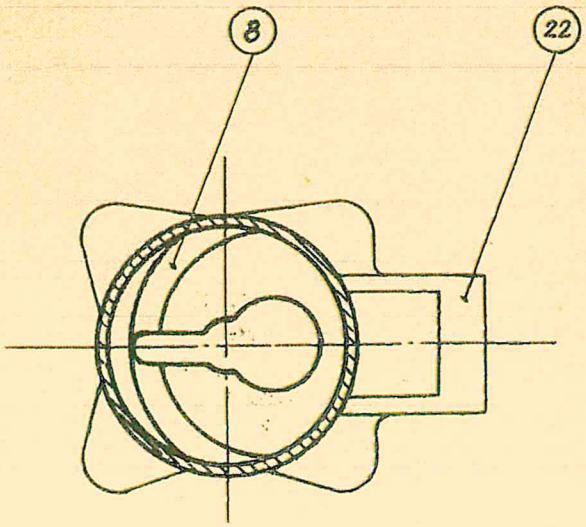

Fig. 6

3. Adjusting and inspection of circuit breaker

The adjusting must be always made when the contact pin (16) was dismantled or exchanged.

3.1 The adjusting of contact rod.

- to disengage the screw (34) from connection rod (43)
- to screw the damper of making operation (25) up to the bottom stop in body (12)
- to measure the lift of contact pin between following positions:
  - circuit breaker opened – the contact pin is pulled out till the elastic stop (7) bears against the damper piston (14)
  - circuit breaker – the contact is pulled in till the tip (9) bears against the base of holder (32)
- the drive is to be set into the open position in such a way that the stop of the lever (70) bears against breaking damper (67), the contact pin is pulled out till the elastic stop (7) bears against the damper piston (14) and the hinge screw (34)
- to tighten the stop (35) and to lock the position to hinge screw (34) by means of nuts (24).

These operations having been made on all three poles, the spring of the drive (71) must be taken out. This can be done in such a way, that the spring is stretched by 4 dents on the ratched wheel (60) by means of hand crank. So prolongated spring (about by 30 cm) must be fixed in this position by means of twoo wedges inserted in clearances between turns (one against the other). The washers can be used instead of vedges. First the stop (58) is disengaged with the dent of ratched wheel, then the stop (61) and in this manner the spring is released and it can be dismounted from hinges.

- to close by hand by pushing down the insulating arms (44) till the stop (53) bears against the locking lever (54)
- to screw off the damper for making operation (25) till the clearance reaches 0,5 mm between the shim (37) and screw stop (35) and to lock by nut (27)
- to open by hand by pushing up the insulating arms (44) till to the stop and to measure contact pin path which must be smaller than the measured value of max. stroke
- to hang up the spring (71) on the pivot and to lock it.

3.2 Checking the contact pin travel.

Circuit breaker is closed by means of spring and the clearance between the shim (37) and screw stop (35) must be checked. This clearance would be about 0,5 mm. Circuit breaker being opened, the clearance between the shim (37) and screw stop (35) states the travel of circuit breaker, the valve of which would be about 160 mm + + 4 mm – 3 mm.

3.3 Checking the contact pin engagement with contacts.

The contact pin (16) and the insulating arms (44) are disengaged by tak-

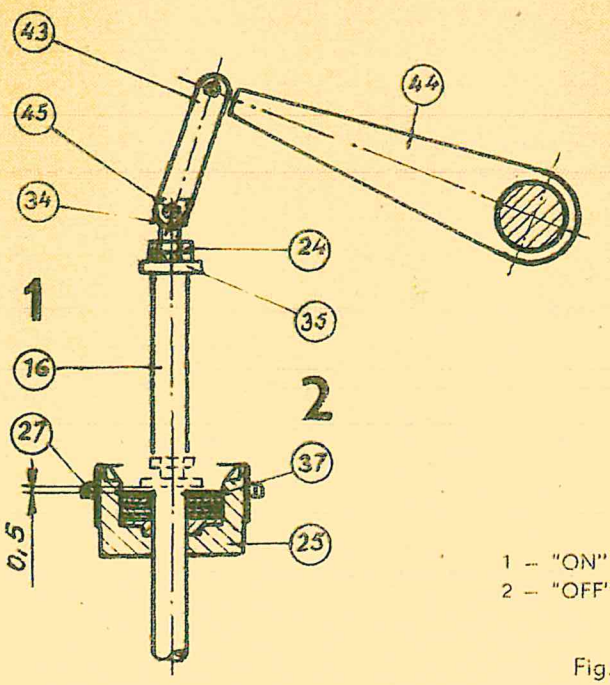

1 – "ON" position
2 – "OFF" position

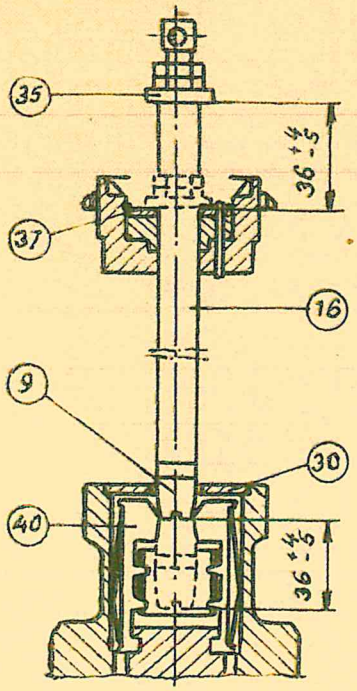

Fig. 7

ing out the pivot (45). The contact pin is slowly pushed down by hand till the arcing tip (9) bears against the contact finger (40). This position can be estimated by experience – high resistance to motion when the contact between contact pin and fingers is reached; his position can be accurately stated by means of battery tester connected between upper and lower terminal. The clearance between the shim (37) and screw stop (35) states the value of engagement of contact pin in the contact (about 36 mm + + 4 m – 5 m).

This checking operation is carried out on all poles of circuit breaker.

4. Replacement of other parts

4.1 Replacement of electromagnet coils

Closing or tripping magnet – to disconnect the conductors on coil, to remove the lower holder of magnet, to replace the coil and to connect.

Minimum voltage release – first the supply voltage must be disconnected and then the conductors can be dismounted from incoming terminals on the coil. The coils being replaced and the nuts being tightened, the correct operation of the release can be checked.

4.2 Replacement of scraper ring.

The contact pin and insulating arms must be disengaged and the upper part of contact pin and all details according to Fig. 1, detail A, must be dismounted to enable the replacement of scraper ring (38).

Attention – Before the circuit breaker energizing the adjustment and checking of circuit breaker according to the cl. 3.1 up to 3.3 must be carried out.

4.3 Replacement of inspection window and float oil level gauge.

The damaged inspection window can be replaced by screwing off and replacing by new one.

When the parts of oil level gauge are damaged inside the pole, the whole oil level gauge (6) must be replaced. This can be done by dismounting the bottom terminal (22) with arc chute and loosening the safety nut of oil level gauge. Replacing the complete float oil level gauge, the new packing ring (2) must be used.

5. Oil exchange

5.1 Oil discharge.

Discharge hole (11) serves for draining off the oil from the pole. For opening the valve 3–4 turns of bottom part are sufficient.

5.2 Oil filling.

1,5 l is a sufficient amount of oil for one pole. Before filling it must be checked whether the discharge hole (11) is slosed and the nozzle (39) is not chocked. The oil is filled by means of a funnel inserted into the opening after screwing off the plug (33). Oil must be poured in slowly to enable the watching of oil amount in inspection window of oil level gauge. The oil level being stabilized, the coloured end of gauge stick must be seen in non-coloured part of inspection window.

The filling being correct finished, the filling hole can be covered by plug (33) with packing piece (23), and the pole must be cleaned to be dry and clean.

6. Spare parts

6.1 Spare parts for circuit breaker.

The number of parts for 5-year's service (stated in the following table) is recommended only, for exact determination the value of breaking current number of short-circuit current breaking, frequency of operations must be known. For this purpose the table 4 can be used.

Spare parts for HK 4-6 B DELLE circuit breakers

Table 5

No.	Name	Prod. No.	Number of PCS for service			Weight	Price
			2-years	5-years			
	Bottom contact rose	3 22 0133		3	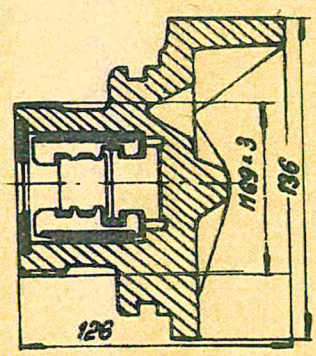	2,5	
	Arc chute	3 22 0139	3	6	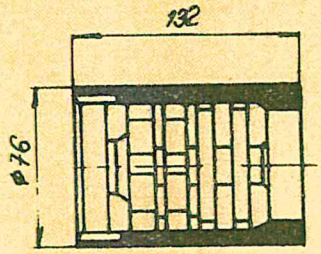	1,3	
	Arcing tip of contact pin	4 22 0478	3	6	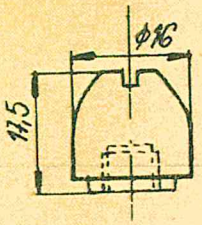	0,12	
	Contact finger	8 22 4108.4	60	60	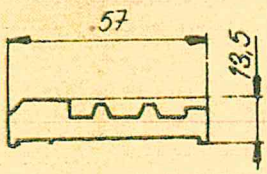	0,06	
	Contact cover (tungsten)	4 22 0511	3	6	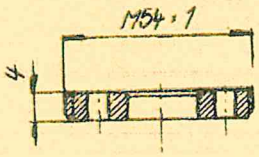	0,15	
	Spring of contact finger	4 22 0445	60	60		0,005	

Spare parts for BLRM drive and HK 4-6 B circuit breaker

Spare parts for BLRM and HK 4-6 B circuit breaker

Table 6

No.	Name			Prod. No.	Number of PCS for service 2-years	Number of PCS for service 5-years		Weight	Price
	Tripping and closing coil	48 V	=	2 22 0047	2	4	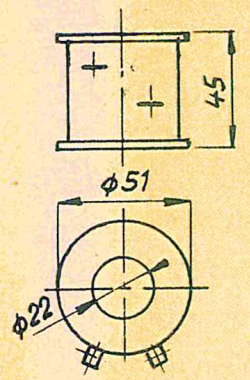	0,25	
			~	2 22 0044					
		60 V	=	2 22 0048	2	4		0,25	
			~	2 22 0054					
		110 V	=	2 22 0049	2	4		0,25	
			~	2 22 0051					
		220 V	=	2 22 0050	2	4		0,25	
			~	2 22 0052					
	Mininum-voltage coil						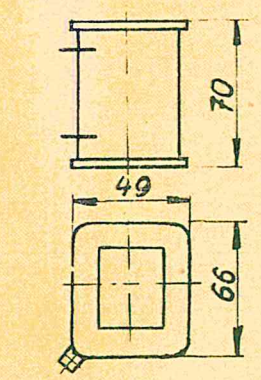		
		110 V	=	3 22 0275	2	4		0,4	
			~	3 22 0272					
		220 V	=	3 22 0275	2	4		0,4	
			~	3 22 0273					
	Motor	60 V	≂	K 2 R R		1	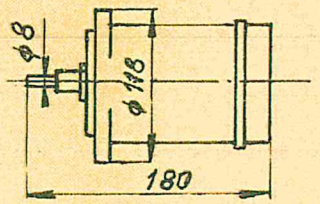	2,2	
		110 V	≂			1		2,2	
		220 V	≂			1		2,2	

tripping and Closing coil — 3220589 — 200Adet

BLRM ~~HK4~~ kaçırı mekanizma uçlukta komple 2 Adet

2220232 Sinyali kablolu solenoid – 30 Adet

HL CIRCUIT BREAKER

HL

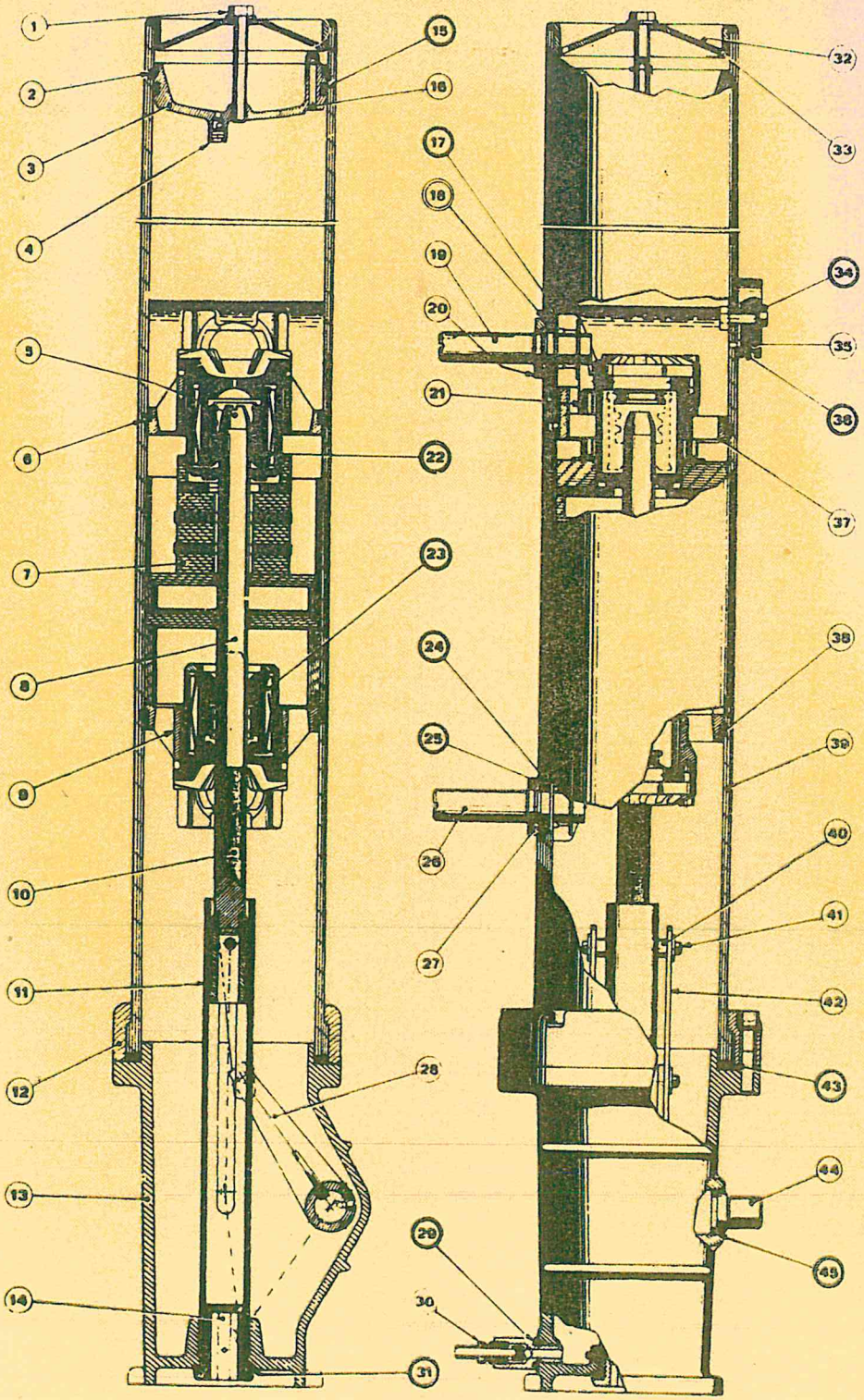
1
2
3
4
5
6
7
8
9
10
11
12
13
14
15
16
17
18
19
20
21
22
23
24
25
26
27
28
29
30
31
32
33
34
35
36
37
38
39
40
41
42
43
44
45

Fig. 8

B. HL circuit breaker

1. Fixing screw of the cover (32)
2. Cover segments of the expansion chamber (3 pcs)
3. Cover of the expansion chamber
4. Globe valve
5. Arcing tip of contact pin (8)
6. Upper segments (3 pcs)
7. Arc chute
8. Contact pin
9. Holder of through-contact rose (23)
10. Insulating lengthening piece of the contact pin
11. Guide tube
12. Sleeve of the insulating cylinder (39)
13. Box of the mechanism
14. Screw of the guide tube (11)
15. Packing ring of the expansion chamber cover (3)
16. Nozzle
17. Packing ring of the incoming terminal (19)
18. Terminal washer
19. Upper incoming terminal
20. Nut of the incoming terminal (19)
21. Forcing-off screw of the arc chute (4 pcs)
22. Upper contact rose
23. Through-contact rose
24. Packing ring of the incoming terminal (26)
25. Lock washer of the terminal
26. Botom incoming terminal
27. Nut of the incoming terminal (26)
28. Lever of the mechanism
29. Packing ring of the discharge valve
30. Oil discharge valve
31. Packing ring of the screw of the box
32. Pole cover
33. Vent hole
34. Screw of the oil level gauge
35. Oil level gauge
36. Packing of the oil level gauge
37. Holder of the upper contact rose (22)
38. Bottom segments (3 pcs)
39. Insulating cylinder
40. Spreader (2 pcs)
41. Pivot of the contact pin
42. Rod (2 pcs)
43. Packing ring of the insulating cylinder and box
44. Shaft of the pole mechanism
45. Packing ring of the mechanism shaft

Note: The following parts are the same:

- holder of the contact rose (9) and (37)
- packing ring of the incoming terminal (17) and (24)
- segments (6) and (38)
- incoming terminal (19) and (26)
- nuts (20) and (27)

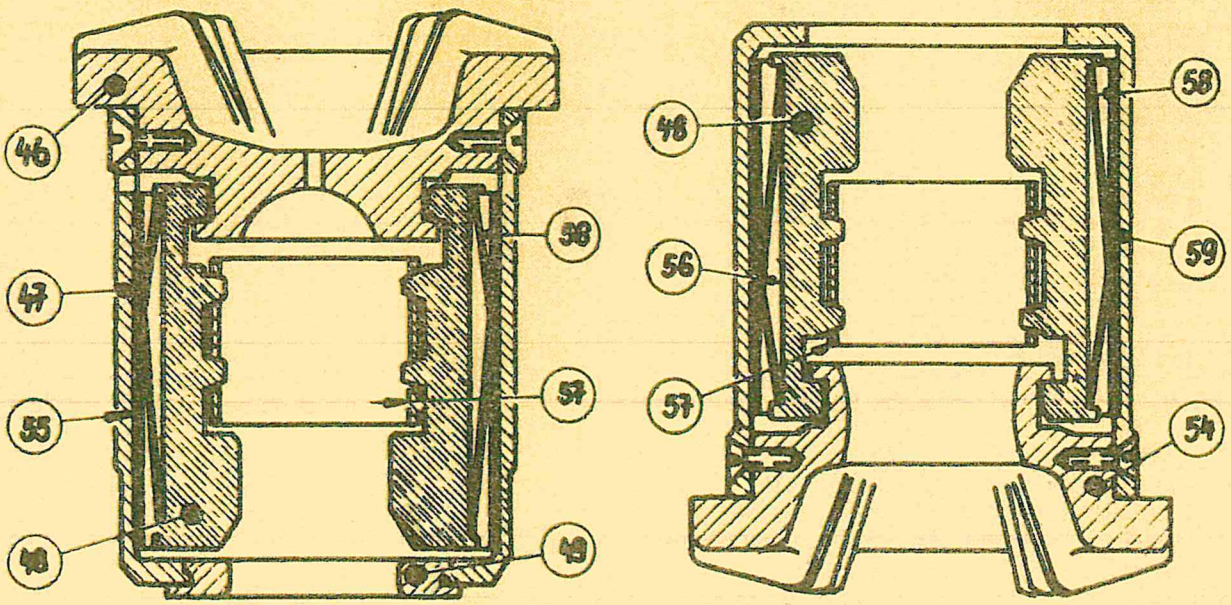

Fig. 9

46. Contact holder of the upper contact rose fingers
47. Cover of the upper contact rose fingers
48. Contact fingers
49. Arcing ring
54. Holder of the through-contact rose
55. Insulating insert
56. Plate spring of the contact finger
57. Inner tube of the contact fingers
58. Insulating insert
59. Cover of the through-contact rose fingers

Low-oil-content circuit breaker type HL 4-8, 1250 A, DELLE – licence

393 0247/a

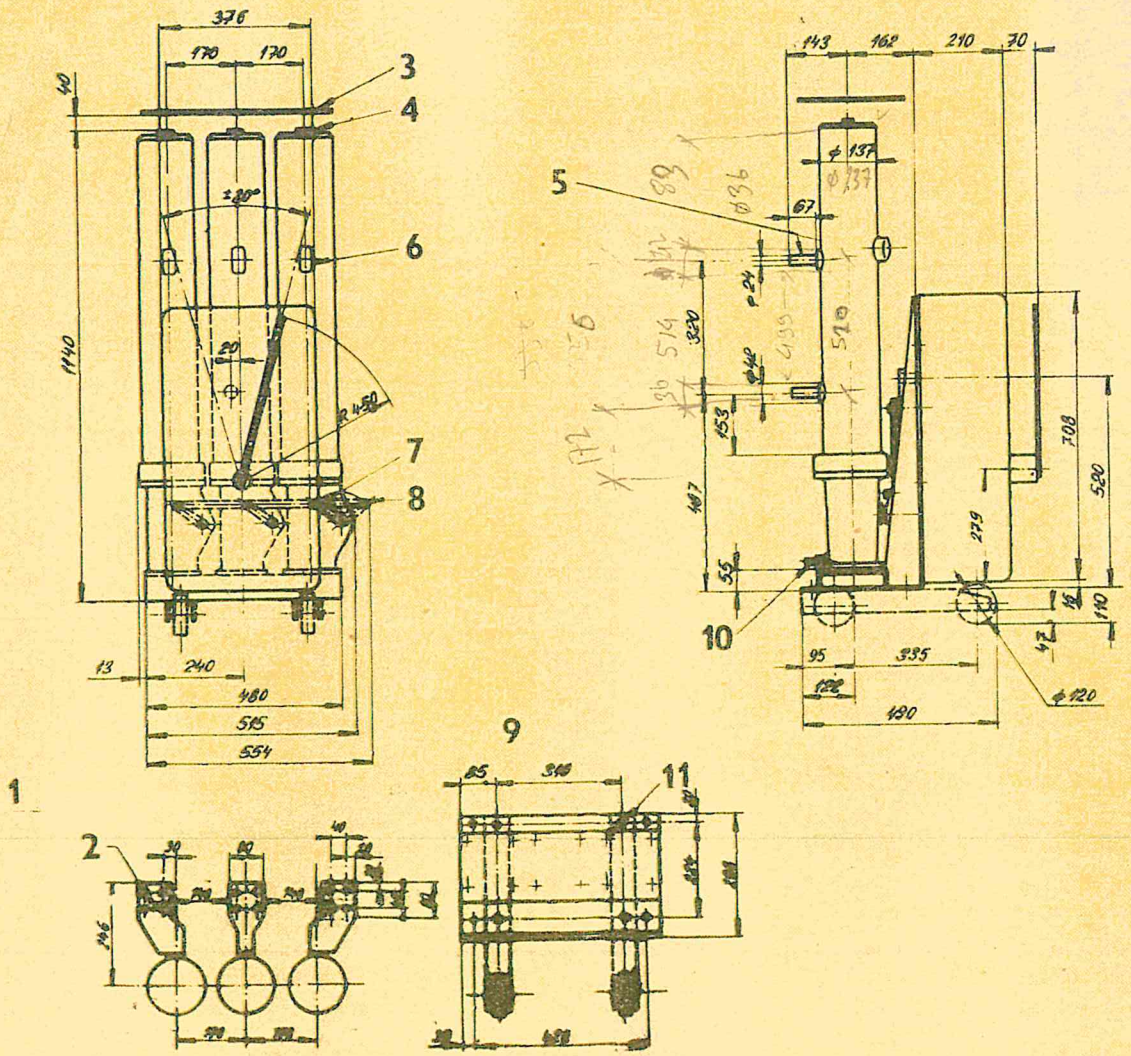

1 – Detail of cable shoes
2 – 4 holes of dia. 14
3 – Ceiling
4 – Filling screws
5 – Current supply
6 – Oil level
7 – "OFF" position
8 – "ON" position
9 – Detail of fixing holes
10 – Discharge valve
11 – 8 holes of dia. 18

Fig. 10

Low-oil-content circuit breaker, type HL 6-9, 1250 A, DELLE – licence

393 0282

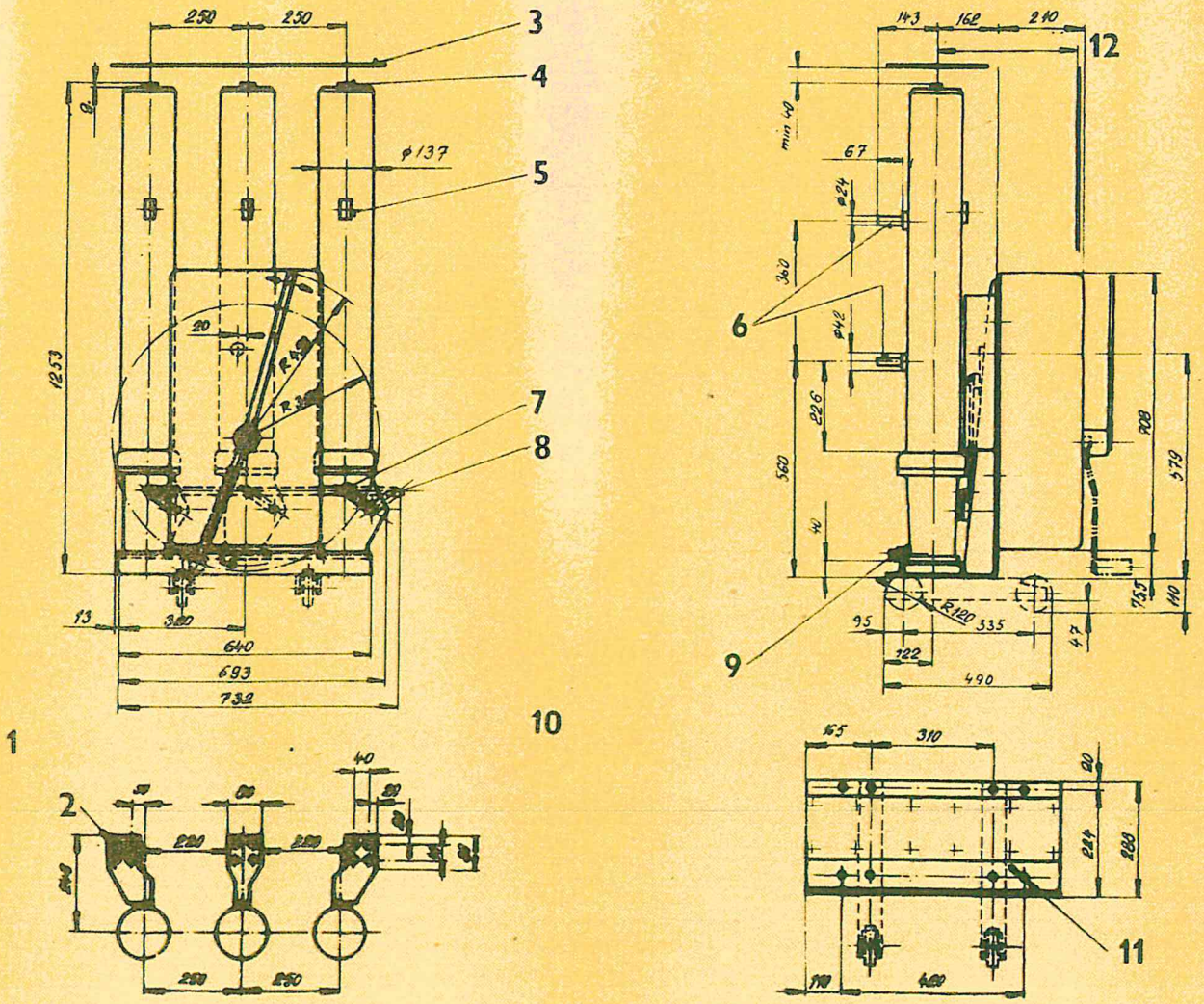

1 – Detail of cable shoes
2 – 4 holes of dia. 16
3 – Ceiling
4 – Filling screws
5 – Oil level
6 – Current supply
7 – "OFF" position
8 – "ON" position
9 – Discharge valve
10 – Detail of fixing holes
11 – 8 holes of dia. 18
12 – Min. 360 from grabing

Fig. 11

1. Table of recommended maintenance terms

Table 7

Work	Each year	Each 3 years or after 2000 C-O	Note
Cleaning the external parts	×		Insulating cylinder (39) vent holes (33), primary relays and their insulating rods. In dust atmosphere conditions the cleaning must be carried out in shorter terms.
Lubrication of mechanism	×		Pivots of rods and hand control by MOLYKO-oil, MOLYKO-vaseline. Mech. drive, pivots of primary relay rods.
Checking el. parts in breaking path		×	Revision terms of these parts are given by the number of breaking operations and by current value, see cl. 2.1. Check of oil and dielectric strength – min. 50 kV/cm.
Check of mechanical state	×		Tightening the screws and nuts of circuit breaker and drive, screws of el. connections, motor brushes, condition of primary relay contacts and auxiliary switch contacts.

2. Maintenance of parts being in contact with arc

Following parts must be inspected:

- contact finger (48)
- arcing ring (49)
- arcing tip of contact pin (8)
- arc chute (7)
- insulating state of oil

2.1 Number of permissible breaking operations before inspection.

Table 8 states the number of permissible breaking operations being made before the inspection of parts given in cl. 2. It is necessary to state that the data serve as information and these can be influenced by specific conditions in service.

Table 8

HL 4/8		HL 6/9
3×39 kAef	700×1251 Aef	4× 20kAeF
4×29 kAef	1400× 800 Aef	500×1250 A eF
7×20 kAef	2000× 630 Aef	1500× 630 A eF
12×14,5 kAef	4000× 400 Aef	

Fig. 12 represents the burning limits of contact finger (48), arcing ring (49) and arcing tip (5) of contact pin (8). Higher value of wearing does not allow further operation.

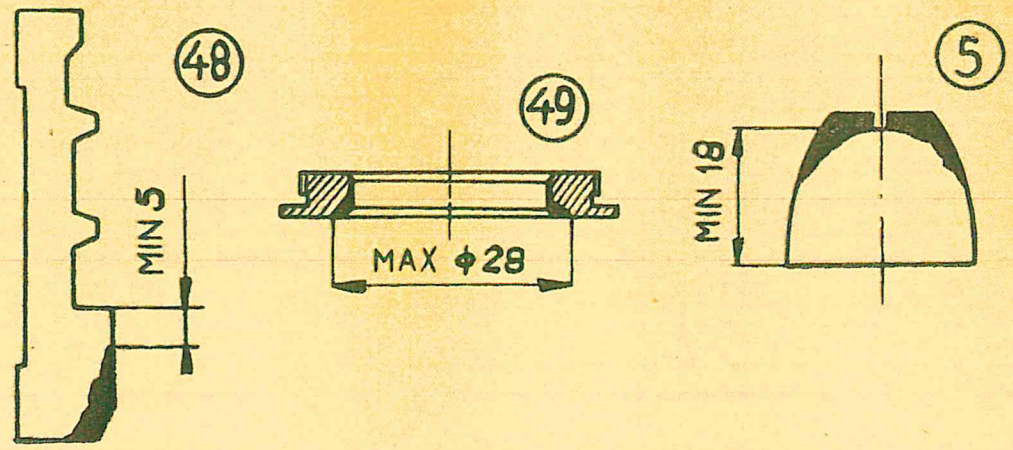

Fig. 12

2.2 Check of oil insulating strength.

The check of dielectric strength of oil must be carried out according to the cl. 4.2 after breaking operations at current value and number given in cl. 2.1. The lowest permissible limit of dielectric strength is 50 kV/cm.

It can be supposed that oil is debased sooner than contacts in the case of load breaking up to rated current and contacts must be replaced sooner than oil in the case of short-circuit current breakings.

3. Dismounting and replacing the worn off parts

Circuit breaker is isolated from network with respect to the Safety rules. The control voltage is disconnected. The check make and break operations are carried out for the energy-stored mechanism springs to release safety. Oil is discharged from all poles – see cl. 5.1.

3.1 Dismounting the pole upper part.

Fixing screw (1) is unscrewed and pole cover (32) is removed. Cover of expansion chamber (3) is pushed down into insulating cylinder and 3 segments (2) are taken out. Cover of expansion chamber (3) is removed from insulating cylinder. In the case of difficult removal, the auxiliary desk (about 10 mm thick), in the center of which there is a hole, can be used. The desk is placed on the upper part of insulating cylinder, dismounted screw (1) is inserted in the hole and screwed into the cover of the chamber (3) and by further rotation of the screw the cover of the chamber can be taken out – see Fig. 13.

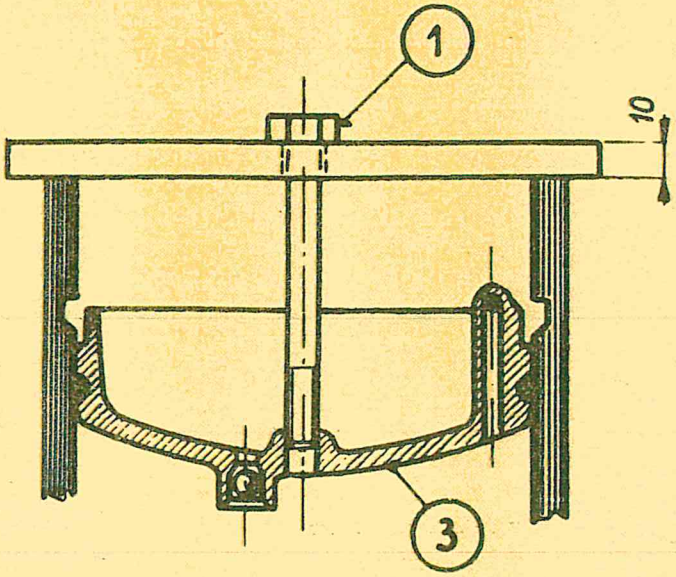

Fig. 13

3.2 Dismounting of upper contact rose.

Pole upper part being removed, the upper contact rose (22) is accessible. 5 socket screws are loosened by means of special screw driver and the contact rose can be taken out.

Note: In the case of special design of circuit breaker for draw-out cubicles, the incoming leads of upper terminals must be removed before dismounting of contact rose.

The contact rose being removed, the condition of arcing ring (49), contact fingers (48) are checked (see wearing limits on Fig. 12). In the case that parts can be used for further service, the melted copper drops are removed by smooth file and the contact finger surfaces must be cleaned without damage of silver-plated coat. Also the condition of arcing tip of contact pin is checked.

3.3 Dismounting of arcing tip of contact pin.

For the change of arcing tip (5) the insulating cylinder (39) has to be dismounted by screwing off the screw in the sleeve (12). Insulating cylinder is taken up. The copper part of contact pin is fixed in copper chuck jaws, lockked against turning and the arcing tican be screwed off by means of suitable tool. **ATTENTION!** Contact pin must not move round a slight amount for deformation and damage of mechanism in box (13) not to occur. When the larger amount of turning is found out, attention must be paid to arc chute (7) and the degree of damage must be inspected.

3.4 Dismouting of arc chute.

The contact rose (22) being removed, 4 forcing-off screws (21) are loosened by means of hexagonal bar, the nut (27) of incoming terminal (19) is loosened, the terminal bolt (19) is turned through an angle of 90° and taken out of insulating cylinder. The attention must be paid to packing ring (17), washer (18) or (60) and (61). Holder (37) of upper contact rose is pressed down and, three segments (6) are removed and the holder is taken out of insulating cylinder. Thus,

the removal of arc chute (7) is enabled. The arc chute is washed in pure transformer oil, rubbed off by a clean rag and blown-off by compressed air.

4. Mounting of pole after revision

Individual parts are assembled in opposite sequence than in the case of dismounting. Care must be taleen of correct placing and spacing the parts. Mounting the contact rose, the insulating insert (55) must be carefully located in the bottom of contact finger (47) cover so that 4 holes are kept free in periphery of cover. Correct position of plate springs (56) must be secured by placing the shorter arms towards holder of contact fingers (46). The arcing ring (49) is tightened without undue force. Before remounting the contact rose holder (9) and (37), the correct position of segments must be inspected: Incoming terminal (19 and 26) together with washers are assembled according to Fig. 14. nut is tightened by the moment of 5 kpm.

Insulating cylinder (39) and box of mechanism (13) is carefully packed by ring (43), screws of sleeve of insulating cylinder (12) are tightened by the moment of 4 kpm. Cover of expansion chamber (3) with inserted packing ring (15) is turned in such a way that air vents are in longitudinal line of incoming terminal and oil level gauge – see Fig. 15. Fixing screw (1) of pole cover is tightened so that the bearing surface under the screw is in one plane with the cover edge – see Fig. 16.

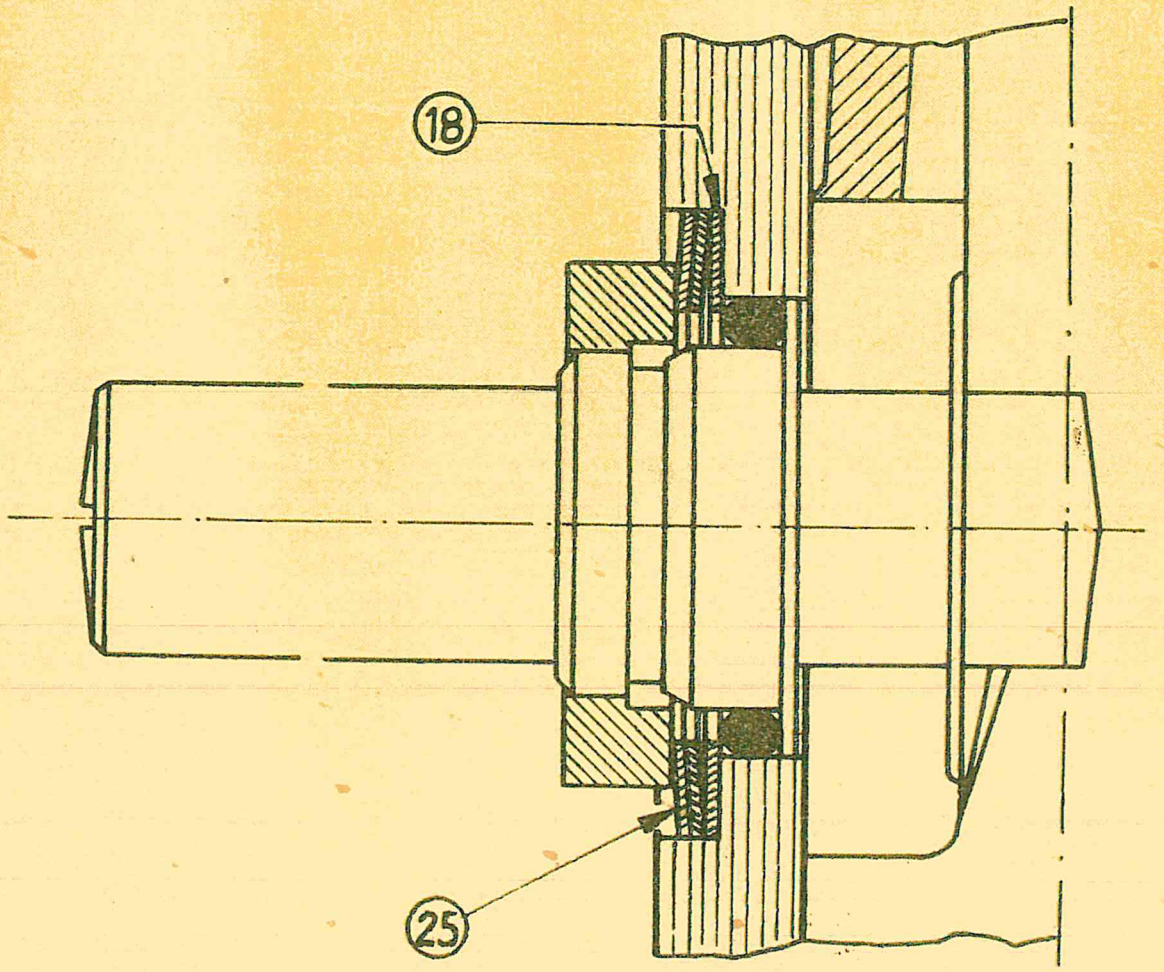

Fig. 14

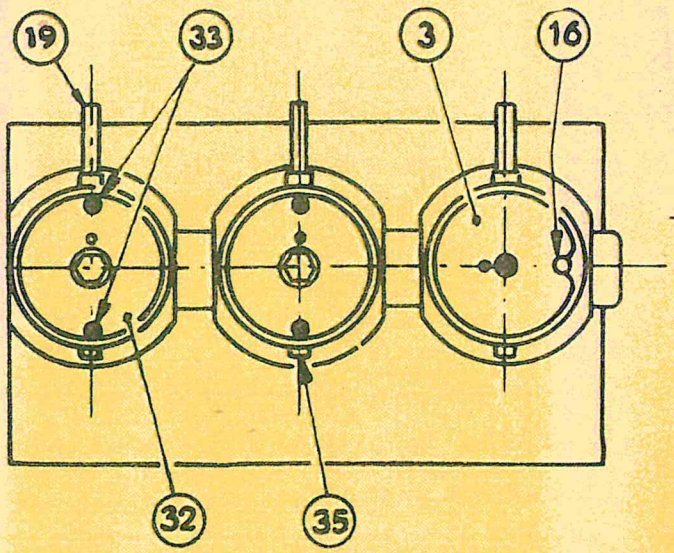

Fig. 15

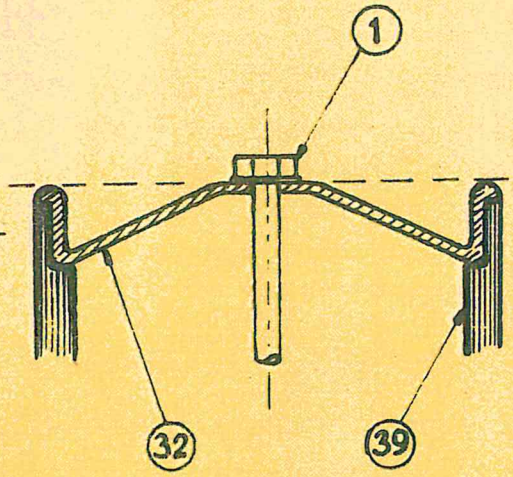

Fig. 16

5. Oil exchange

5.1 Oil discharge.

Rubber tubing of inner dia. about 10 mm is slid on oil discharge valve (30) and by the screwing off the valve body by about 3–4 turns the globe valve is opened.

5.2 Oil filling of poles.

There is about 7–8 litres of oil in one pole. Transformer oil according to ČSN 65 6845 Standard is used. Dielectric strength of oil before filling must be higher than 180 kV/cm, after filling must not drop below 130 kV/ /cm.

6. Spare parts

Ordering spare parts, the following must be stated (according to the name plate of circuit breaker):

– type, No. of apparatus, working voltage

Number of parts and the name must be specified according to the description given in Fig. 8, 9 and 10.

It is recommended to order spare parts required for the service of new circuit breakers as soon as possible according to the following table. It is mentioned that the given number of spare parts serves as information and it changes according to the service class of circuit breaker.

Spare parts for DELLE circuit breaker HL 4-8/1250 A, HL 6-9/1250

Table 9

No.	Name	Prod. No.	Number of PCS for service 2-years	Number of PCS for service 5-years		Weight	Price
	Circuit breaker for cellular schwitchboard Contact rose obere Truck-type circuit breaker	4 22 0876 4 22 0578 4 22 0877		3	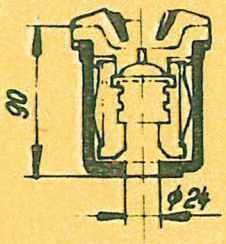	1,9	
	Arc chute	HL 4-8 A = 184,5 2 22 0088 322 0503 HL 6-9 A = 223,5 2 22 0113	3	6	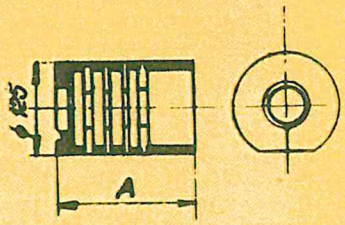	1,45	30 Added
	Arcing tip of contact pin	4 22 0559	3	6	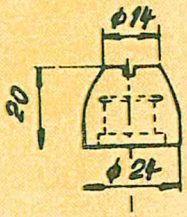	0,14	200 Added
	Arcing ring (tungsten)	4 22 0569 4 22 1469	3	6	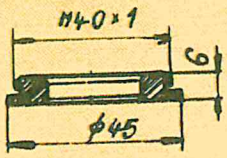	0,15	30 Added
	Contact finger	8 22 4108.4 8224110	100	100	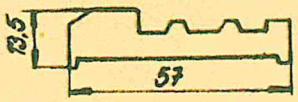	0,065	1000
	Spring of contact finger	4 22 0445	100	100		0,005	3000 Added

For the service of more years it is necessary to replace the whole circuit breaker

Ø 19-26 – (422 1329) 400 Adet

Alt ve üst giriş terminal bağlantı parçası

Contact finger (822 4110) – 1000 Adet

HG CIRCUIT BREAKER

HG

Pole of HG 3-8, 1250 A, 2501, 2510 circuit breaker

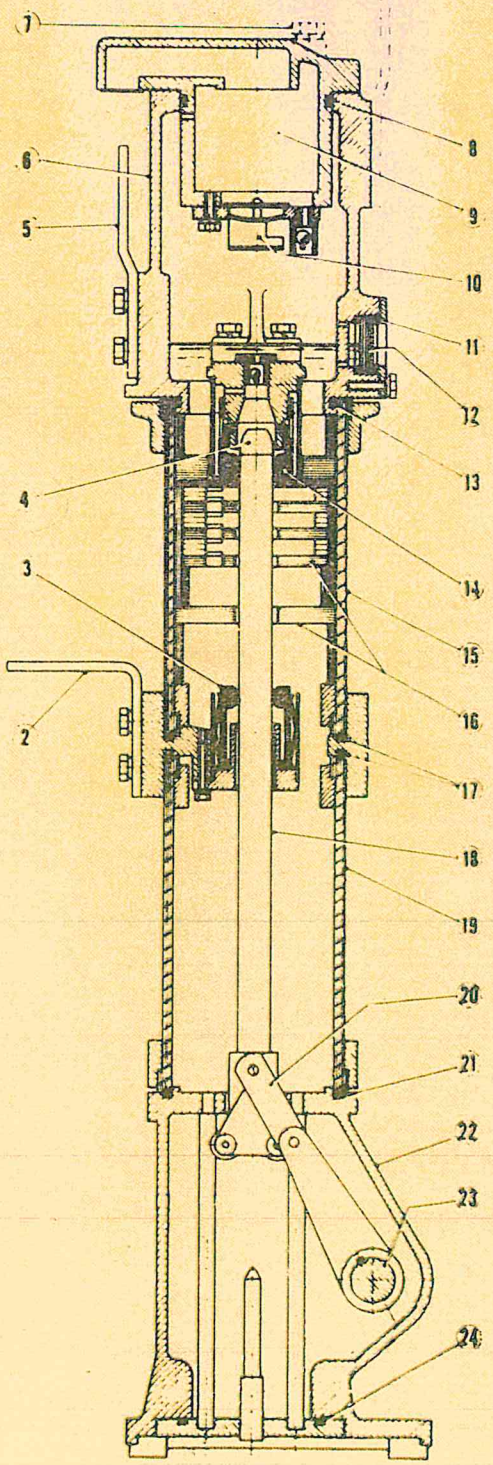

Fig. 17

C. HG circuit breaker

Legend to Fig. 17 and 18

2. Bottom outgoing
3. Through-contact rose
4. Arcing tip — 60 Adet
5. Incoming terminal
6. Expansion chamber
7. Screw of filling hole
8. Packing
9. Space for pressure equalizing
10. Safety valve
11. Packing of oil level gauge
12. Oil level gauge
13. Packing
14. Upper contact rose
15. Insulating cylinder — 40 Adet
16. Arc chute
17. Packing
18. Contact pin — 20 Adet
19. Bottom insulating cylinder
20. Rod
21. Packing ring of insulating cylinder
22. Bottom box — 6 Adet
23. Lever of drive
24. Packing
25. Ring-ype transformer
26. Upper insulator
27. Bottom insulator

Parallel pole of HG 3-8 circuit breaker, 4001

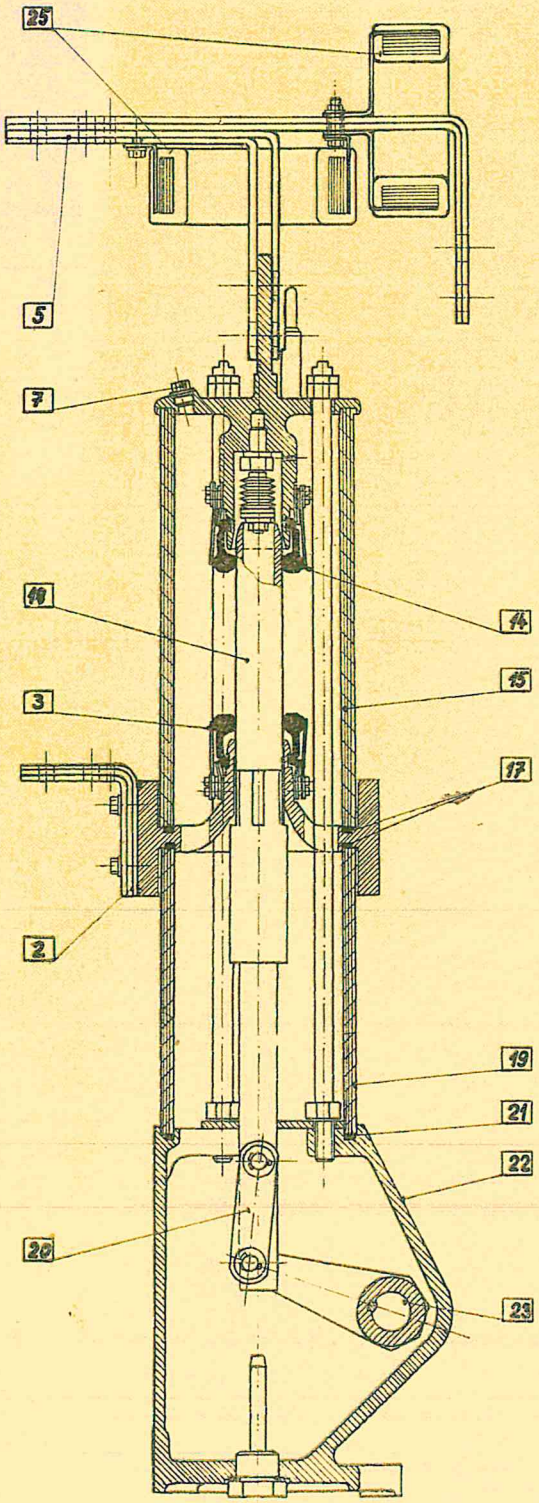

Fig. 18

HG 3-8/1250 A

393 0249

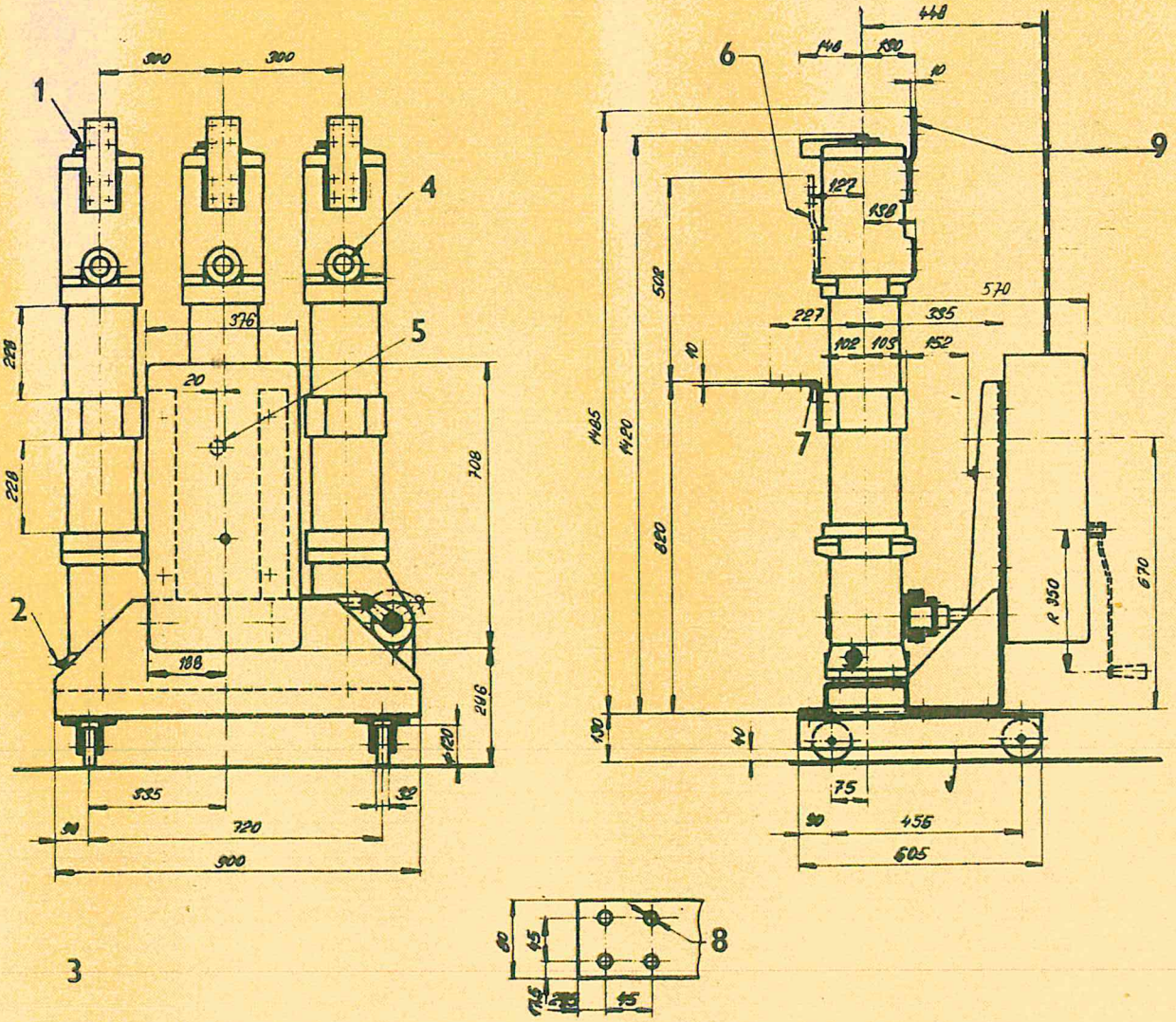

1 – Filling screws
2 – Discharge valve
3 – Detail of connection
4 – Oil level
5 – Drive shaft
6 – Current supply (behind)
7 – Current outlet
8 – 4 holes dia. 14
9 – Current supply (in front)

Fig. 19

Low-oil-content circuit breaker HG 3-8/4001 DELLE-licence

393 0337

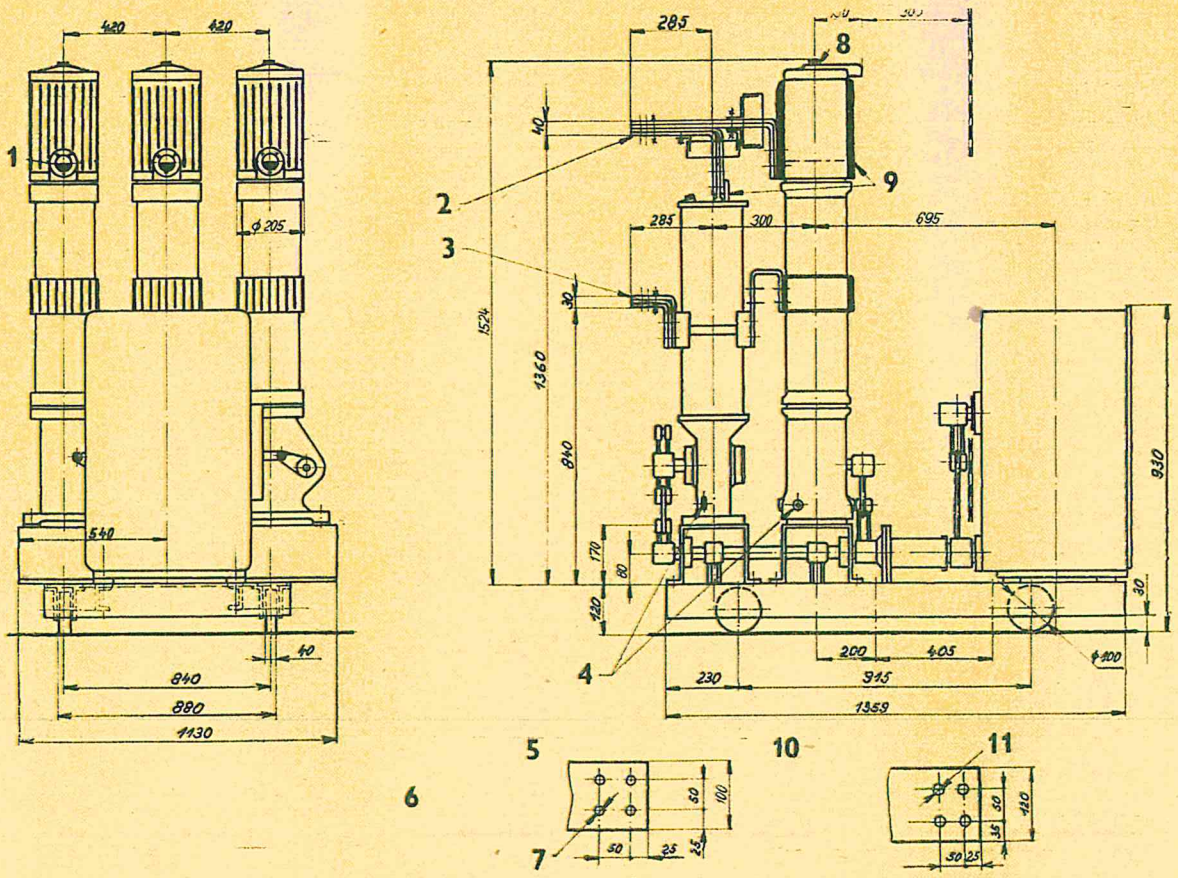

1 – Oil level gauge
2 – Current supply
3 – Current outlet
4 – Outlet closure
5 – Current supply
6 – Detail of connection
7 – 4 holes dia. 23
8 – Filling screws
9 – Oil level
10 – Current outlet
11 – 4 holes dia. 23

Fig. 20

Low-oil-content circuit breaker HG 3-8/2510

2 22 0149a

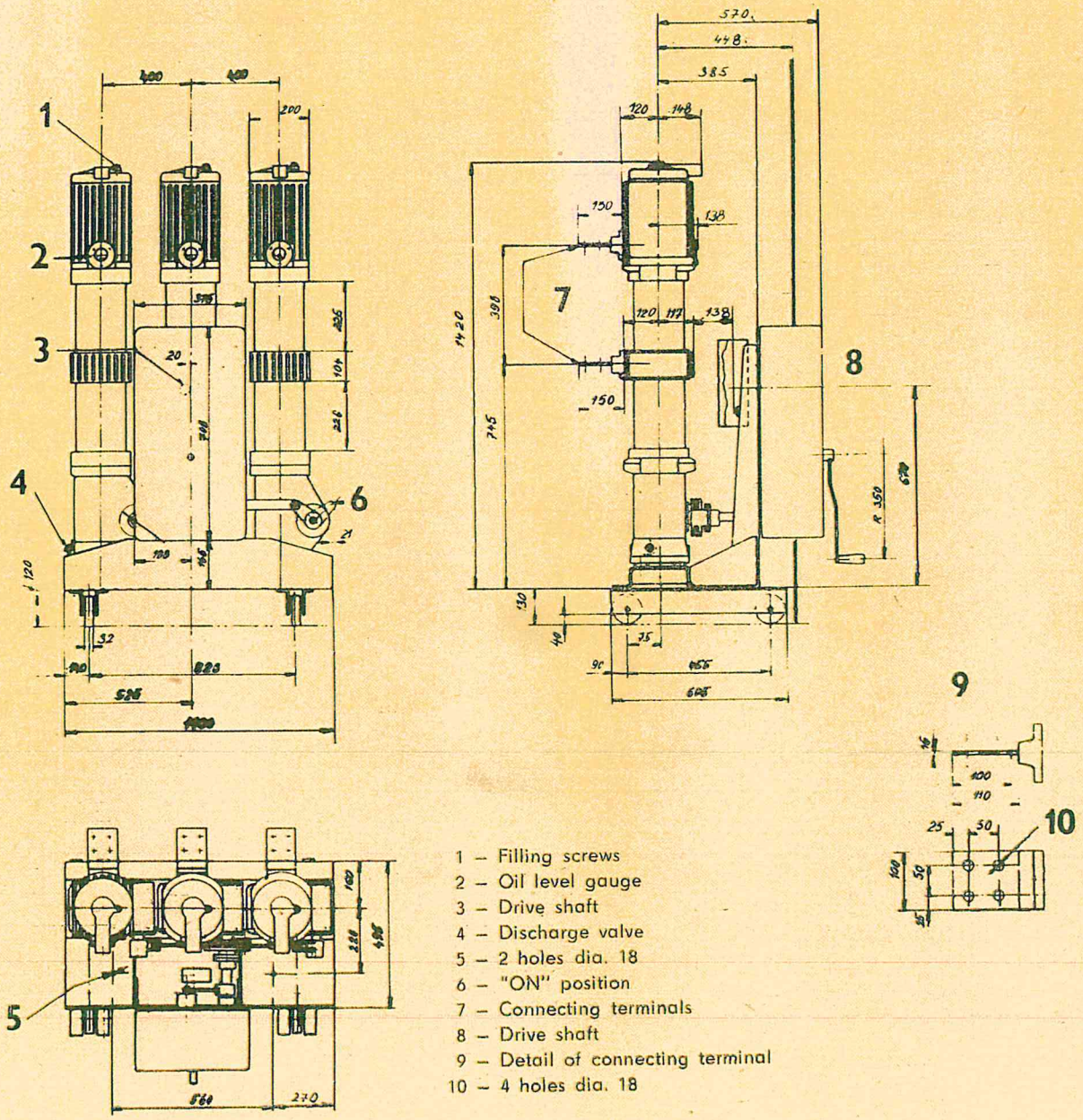

1 – Filling screws
2 – Oil level gauge
3 – Drive shaft
4 – Discharge valve
5 – 2 holes dia. 18
6 – "ON" position
7 – Connecting terminals
8 – Drive shaft
9 – Detail of connecting terminal
10 – 4 holes dia. 18

Fig. 21

Low-oil-content circuit breaker HG 3-8/2501

222 0137

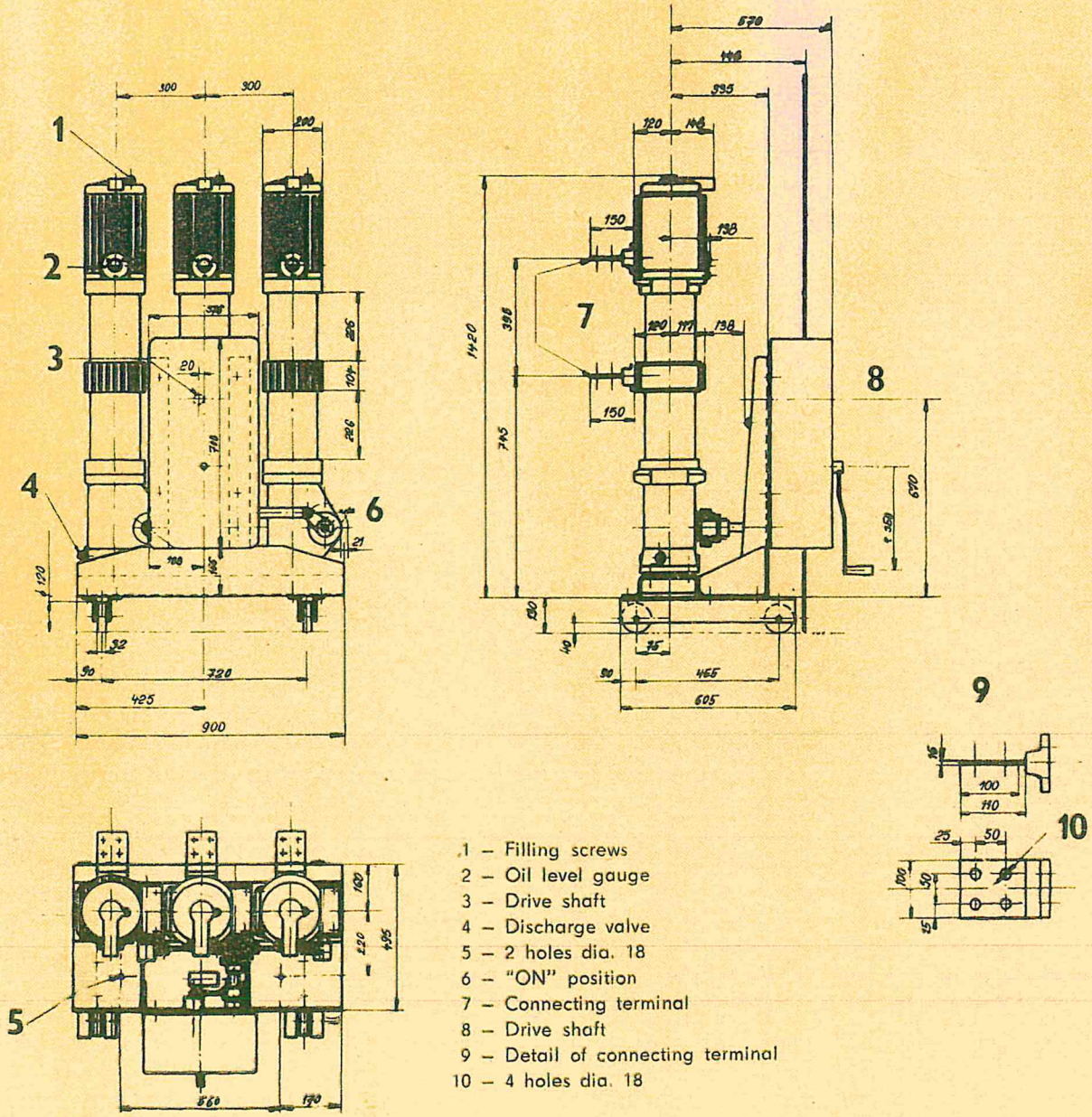

1 – Filling screws
2 – Oil level gauge
3 – Drive shaft
4 – Discharge valve
5 – 2 holes dia. 18
6 – "ON" position
7 – Connecting terminal
8 – Drive shaft
9 – Detail of connecting terminal
10 – 4 holes dia. 18

Fig. 22

1. Table of recommended maintenance terms

For service maintenance it is recommended to follow the terms given for needed operations in accordance with the following table.

Table 10

Work	Each year	Each 3 years or after 2000 C-O	Note
Cleaning of external parts	×		Insulating cylinder (15), insulating cylinder of parallel pole, upper insulator (26), bottom insulator (27) (at pole designed for 4000 A), discharge globe valve. In dust atmosphere conditions the cleaning must be carried our in shorter terms.
Lubrication of mechanism	×		To wash by kerosene or petrol. Pinions, transmission chains, bearing of shaft, rollers and all pivots of levers and rods have to be lubricated by PP 90 oil.
Check of mechanical state	×		Tightening of screws and nuts of circuit breaker and drive, screw el. connections, motor brushes or checking of air turbine, state of auxiliary relays contacts and switch contacts.
Checking of el. parts in breaking path		×	Revision terms are given by number of breaking operations and by current value (see cl. 2.1). Check of oil and dielectric strength min. 50 kV/cm.

2. Maintenance of parts being in contact with arc

Following parts must be inspected:

- contact finger of upper contact rose (14)
- arcing tip of contact pin (4)
- arc chute (9)
- insulating state of oil

2.1 Number of permissible breaking operations before inspection.

The number of permissible breaking operations being made before the inspection is dependent on value of breaking currents. For your imagination there are given the number of permissible breaking operations for different currents and burning limits of contact finger, arcing tip of contact pin in Table 11 and Fig. 23, respectively. The wearing being greater, the parts must be replaced.

Table 11 Number of permissible breaking operations

HG 3-8/1250 A	5×58 kA	1500×1250 A	4400× 630 A
HG 3-8/2501 A	5×50 kA	650×2500 A	1500×1250 A
HG 3-8/4001 A	5×58 kA	250×4000 A	750×2000 A
HG 3-8/2510 A	4×25 kA	125×2500 A	400×1250 A

Number of permissible breaking operations it is necessary to state that numerical values of permissible breaking operations are given as information. In some cases the certain parts must be replaced during periodical inspection, sooner than the term of wearing limit is expired to prevent the dismounting between two usual revisions.

2.2 Check of oil insulating strength.

The check of dielectric strength of oil must be carried out according to the cl. 4.2 after breaking operations at current values given in the cl. 2.1. The lowest permissible limit of dielectric strength is 50 kV/cm. It can be supposed that oil is debased sooner that contacts in the case of load breaking up to the rated current, and contacts must be replaced sooner than oil in the case of short-circuit current beakings.

3. Dismounting and replacing of worn off parts

Circuit breaker is isolated from the network with respect to the safety and rules. The control voltage is disconnected. The check make and break operations are carried out for the springs of energy-stored mechanism to release safety. Oil is discharged from all poles – see cl. 6.1.

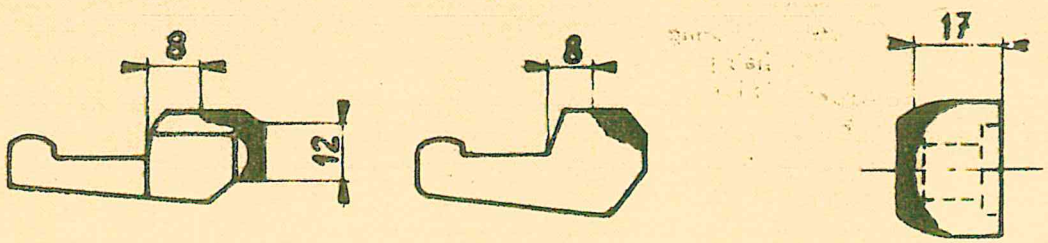

Fig. 23

3.1 Dismounting of pole upper part and contact rose.

Eight screws placed round the periphery of expansion chamber are unscrewed. This being done, the expansion chamber is free, in which the upper contact rose (14) is placed. 4 screws are loosened and the contact rose can be taken out. The cover of contact fingers is removed. The contact fingers placed round the periphery of the holder can be inspected and in the case of their dismounting and replacing the care must be paid to the correct seating in the holder and also with respect to the recess in the contact finger cover.

3.2 Dismounting of arcing tip of contact pin.

The square spanner must be used for replacing the arcing tip (4). The arcing tip is screwed on the contact pin shoulder with fine thread.

3.3 Dismounting and checking of arc chute.

The condition of the arc chute (16) must be inspected during the check of contact fingers and arcing tip. The arc chute is taken out from the insulating cylinder, cleared by brush in pure transformer oil and carbonaceous coats are removed from the surface and partitions.

In the case of too damaged arc chute, it must be replaced. The attention must be paid to the correct placing with respect to the bottom outgoing (2) in accordance with Fig. 24.

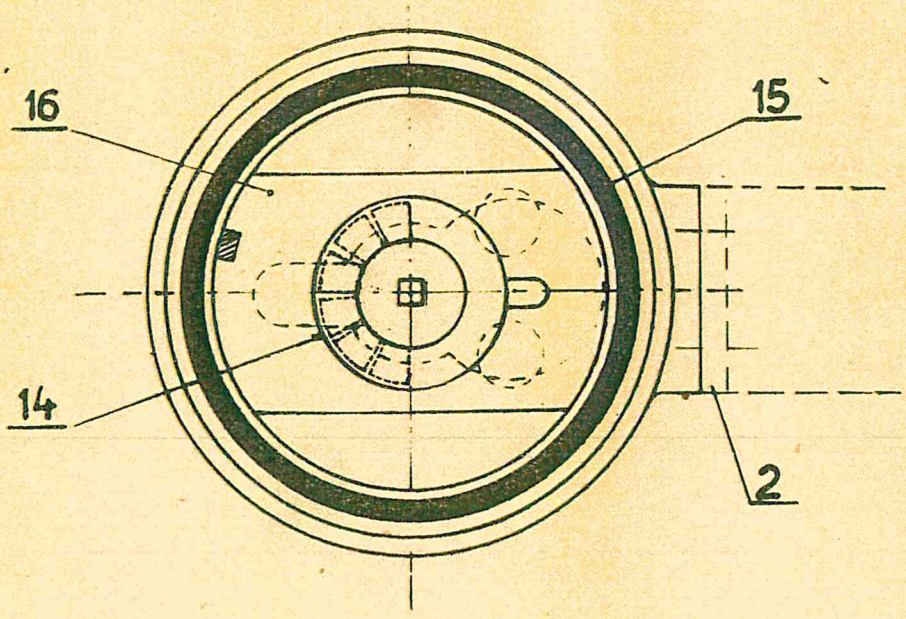

Fig. 24

4. The inspection of parallel pole

The contact system of parallel pole is not influenced by electrical arc so that it does not require any special attention. Oil level gauge only. The insulating state of oil is checked during the oil exchange in the main poles only.

5. Assembling after revision

The reassembling of insulating cylinder including flanges with their packing rings must be carefully carried out after the revision and the replacement of the parts. The screws on the periphery of the flanges must be tightened gradually and alternately by the same force. The filling of the oil is carried out according to the cl. 6.2.

6. Oil exchange

6.1 Oil discharge.

Rubber tubing of inner dia. about 10 mm is slid on oil discharge valve placed in the bottom pole box, and by screwing off the valve boddy by about 3–4 turns the globe valve is opened.

6.2 Oil filling of poles.

There is about 15 litres of oil in one pole and about 20 litres of oil in the parallel pole of HG 3-8/4000 circuit breaker. BTS transformer oil according ČSN 65 6845 Standard is used. Dielectric strength of oil before filling must be higher than 180 kV/cm, after filling it must not drop below

130 kV/cm. The hole with screw (7) serves for the filling by means of the funnel.

7. Spare parts

Ordering the spare parts the following must be stated (according to the name plate of circuit breaker):

– type, No of apparatus, working voltage Number of parts and the name must be specified according to the description given for Fig. 17, 18 and 19, or in accordance with the table of spare parts. It is recommended to order spare parts required for the service of new circuit breaker as soon as possible according to the following table. It is mentioned that the given number of spare parts serves as information and it changes according to the service class of circuit breaker.

Spare parts for DELLE circuit breakers types HG 3-8/1250, HG 3-8/2501, HG 3-8/2510, HG 3-8/4001

Table 12

No.	Name	Prod. No.	Service 2-years	Service 5-years		Weight	Price
	Upper contact rose	HG3-8/1250 HG3-8/2501 HG3-8/4000 2 22 0011		3	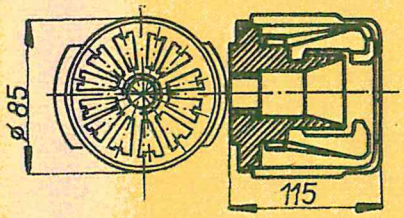	3,2	20 Adet
		HG3-8/2510 3 22 0329		3	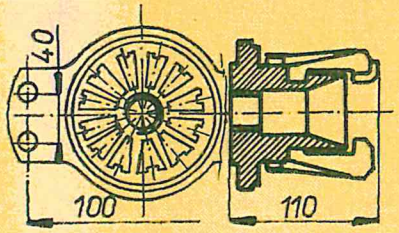	3,3	
	Arc chute	2 22 0148	3	6	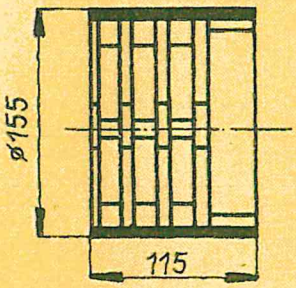	1,6	20 Adet
	Arcing tip of contact pin	4 22 0018	3	6	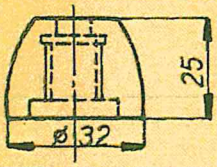	0,17	60 Adet
	Contact finger with tungsten	3 22 0012	36	36	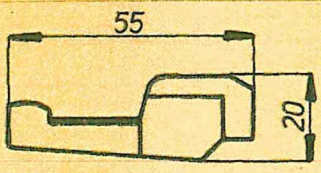	0,065	200 Ad.
	Contact finger	8 22 4103.4	36	36	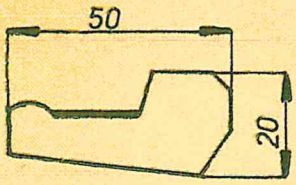	0,055	200 Ad.
	Spring of contact finger	4 22 0007	36	36		0,006	200 Adet
	Spring of contact finger	4 22 0006	72	72	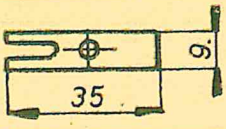	0,003	[illegible]

322 0310 – H63-8 R501 A kem altgul kontak
20 ADet

422 0262 – kem [illegible] kimaşgy – 250 ADet

422 0269 – gül kontak yatdag – [illegible] ADet

H63 – 1 ADet kompl. kem – 6322 [illegible]
H68 – 4 ADet kompl. kem

ELEKTRIC MOTOR CONTROL MECHANISMUS

Energy-stored drive BLR, BLRM, BLRP

393 0306

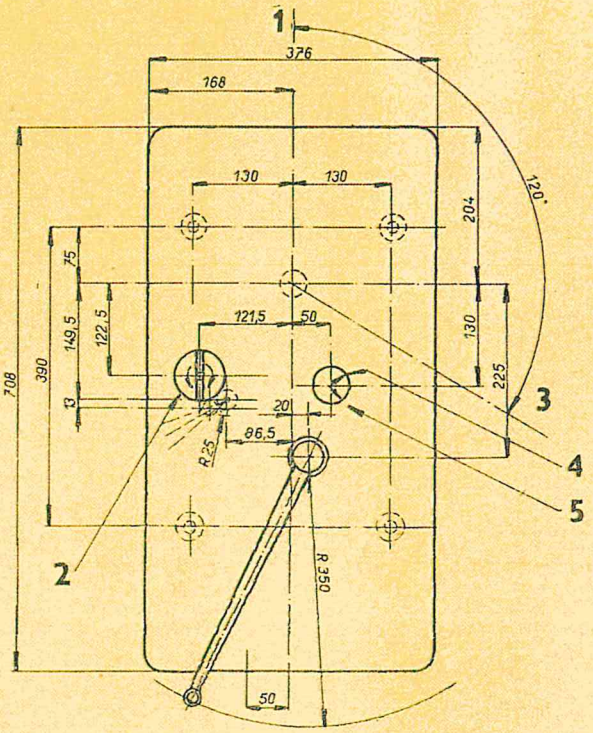

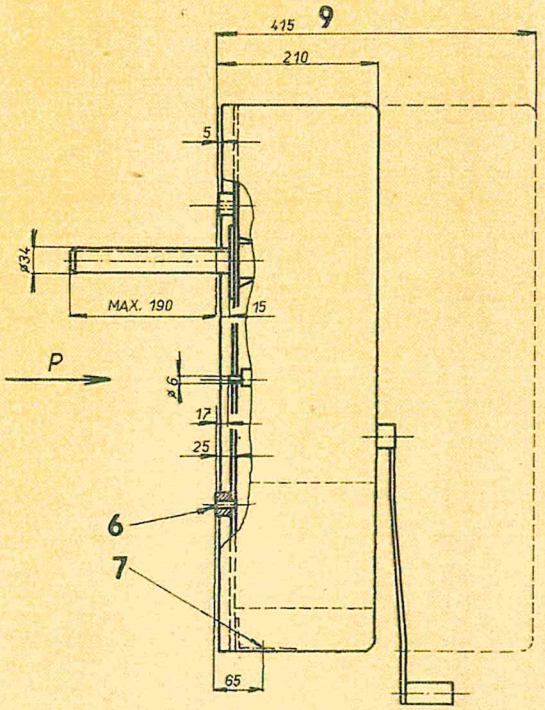

Weight of the drive: BLR – 50 kg, BLRM, BLRP – 80 kg
Revolution number of the hand lever for 1 stretching – 3
Max. power for manual work – 23 kp
Max. permissible bending moment on the shaft dia. ø 35–40 kpm
Max. torsional moment – 20 kpm

8

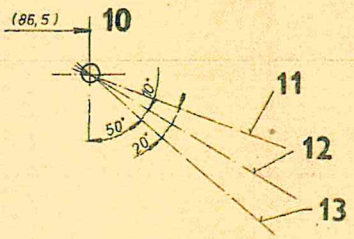

1 – "OFF"
2 – Hand control
3 – "ON"
4 – Indicator of circuit breaker position
5 – Indicator of the closing spring state
6 – 4 holes dia. 11,5 for fixing
7 – Outgoing dia. 36
8 – Moment for the opening – on the opening pivot – 15 kpmm
9 – For the removing of cover
10 – View from P direction to the opening pivot
11 – Open – closing is locked
12 – Close – beginning
13 – Rest position

Fig. 25

Wiring diagram

493 1320

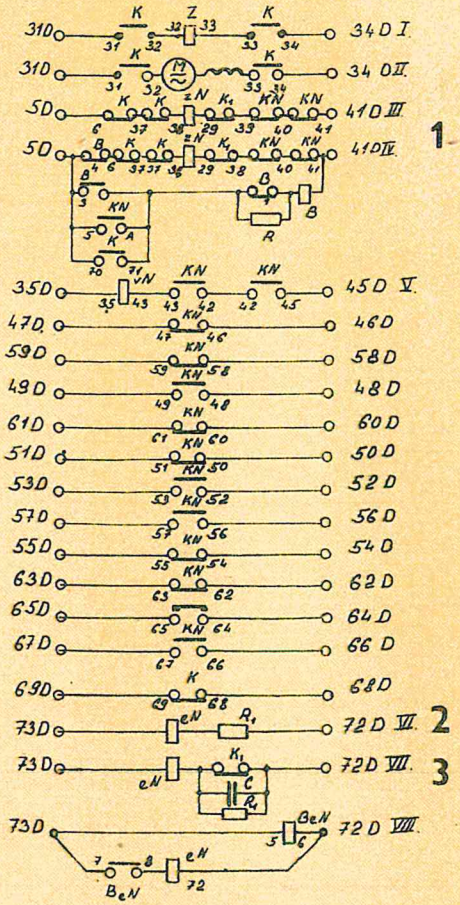

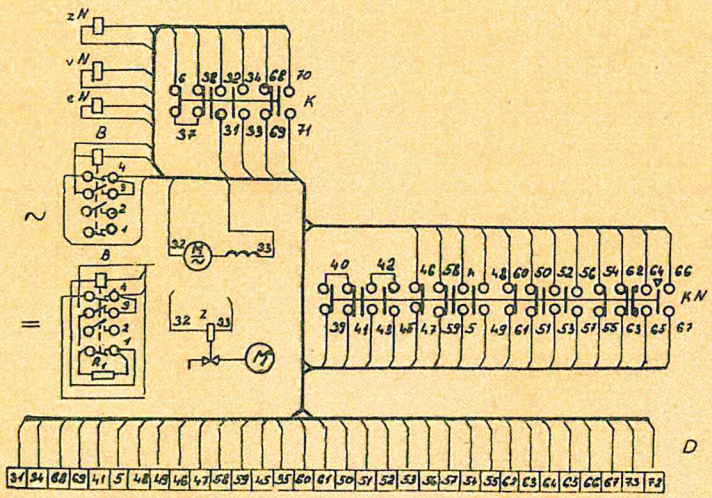

1 – K_1 only with the no-voltage coil placed in front of circuit breaker

2 – At ∾ without R_1

3 – At ∾ without K, C, R

I. Pneumatic motor control with electromagnetic valve DC or AC coil

II. Electric motor control, DC or AC

III. Closing coil circuit for hand drive

IV. Closing coil circuit for motor drive

V. Opening coil circuit

VI. No-voltage coil circuit in the case of the connection behind the circuit breaker

VII. No-voltage coil circuit in the case of the connection in front of the circuit breaker

VIII. No-voltage coil circuit of HK 4-6 B circuit breaker

2N closing coil	K auxiliary switch of the motor
vN opening coil	KN signal cont. opening
eN no-voltage coil	D terminal board
M electric motor	BeN relay of no-voltage coil
M pneumatic motor	R_1 resitance of no-voltage coil
Z control valve	R_2 resistance of RP 30 relay
B anti-pumping relay	

Fig. 26

General view

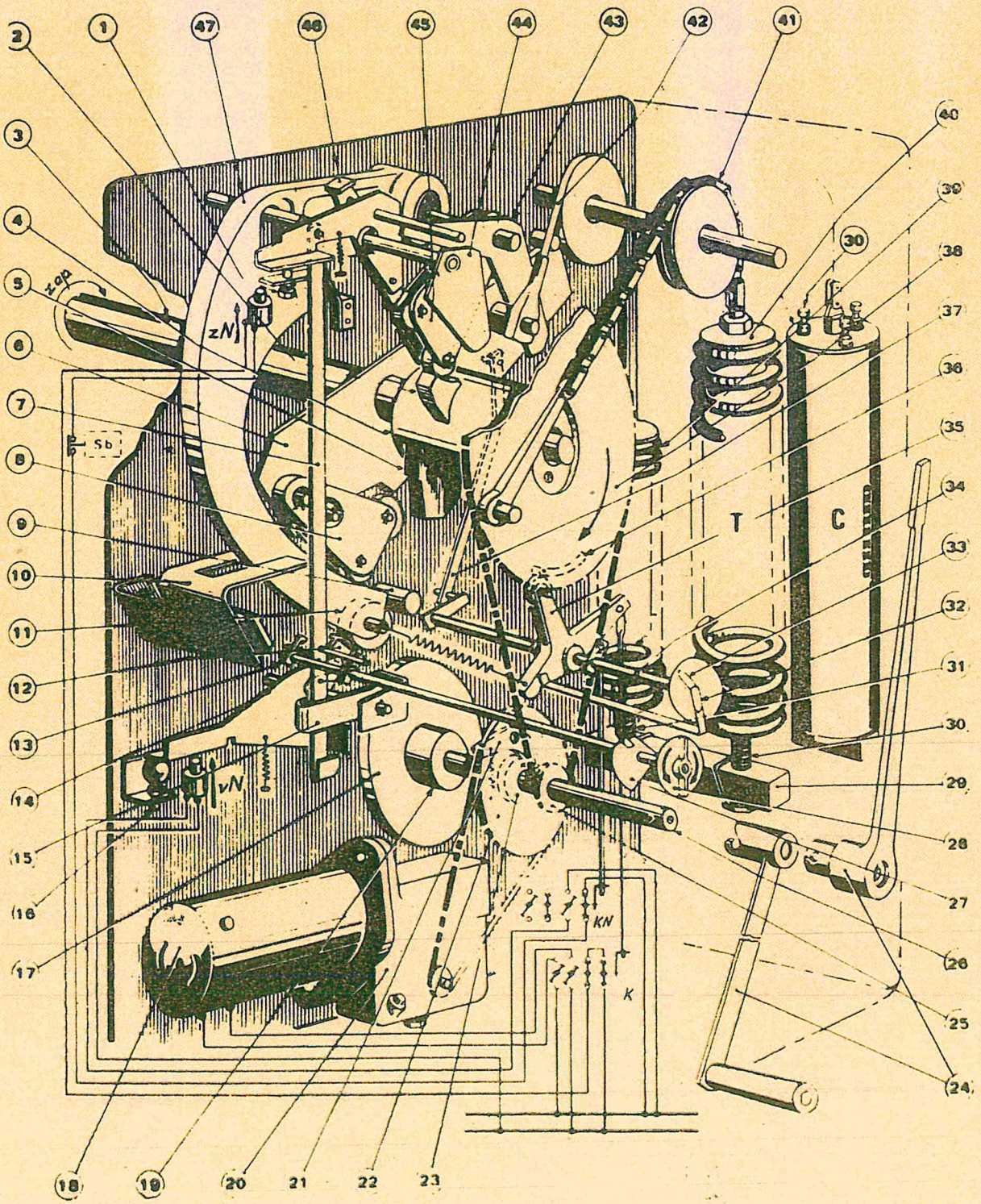

Fig. 27

Legend

1. Adjustable stop of the rest (48)
2. Stop
3. Shaft of the circuit breaker
4. Shaft of the closing spring
5. Carrier
6. Lever
7. Rod for the locking and control of the rest
8. Carrier catch
9. Stop of the guide arm (47)
10. Striker of the guide arm
11. Roller
12. Rest for the arm locking
13. Lever for the hand closing
14. Lever or the hand opening
15. Guide of the rod (7) — 4220229 — Rod kilavunu — 5 Adet
16. Adjustable stop of the rest (12)
17. Flywheel
18. Motor (electric or pneumatic motor)
19. Mechanism preventing the back travel of the closing spring (40)
20. Gear box
21. Tilting catch — 30 Adet
22. Gear wheel
23. Carrier — 30 Adet
24. Handle or lever
25. Gear wheel
26. Shaft
27. Locking disk
28. Control wheel
29. Spring holder (39 and 40)
30. Screw for the adjusting of closing energy
31. Screw for the adjusting of opening energy
32. Optical indicator of closing spring state
33. Optical indicator of circuit breaker state
34. Shaft for indicator (33) and auxiliary switch (KN) control
35. Lever for mechanical disconnecting of motor and for switch control (K)
36. Striker for lever (35) and catch (44) control
37. Control rod
38. Gear wheel for the stretching of closing spring (40)
39. Opening spring
40. Closing spring
41. Chain for the closing spring wheel
42. Rope for the opening spring control
43. Locking catch of the closing
44. Catch for rest control (46)
45. Locking ever of closing spring (40)
46. Rest for the fixing of locking lever
47. Guide arm
48. Releasing lever
49. Stretching lever
50. Rod
51. Releasing lever

K – auxiliary switch of the motor
KN – auxiliary switch
zN – closing coil
vN – opening coil
2220050 — 5 — 200 Adet
cN – undervoltage release
T – tension closing spring
C – pressure closing spring

Clearance take-up

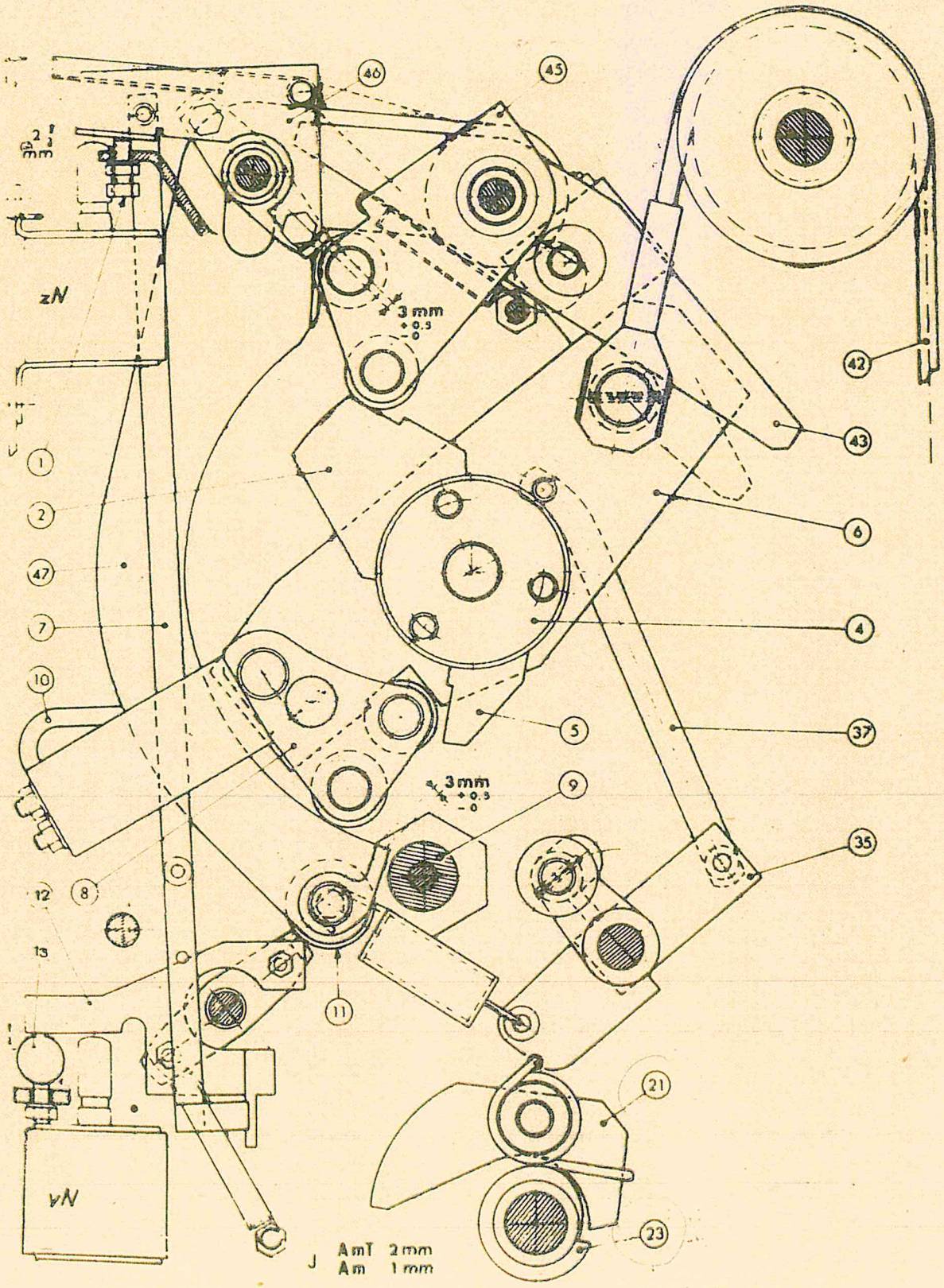

Fig. 28

D. BLR, BLRM drives

The springs of the motor, closing and opening energy of which is set together with the circuit breaker, cannot be replaced.

1. Check before the putting into operation

BLRM drives are delivered with oil filling in gear box (20), therefore the oil level must be checked and, if needed, filled with PP90 oil. The inner wiring of electrical circuit is carried out in the factory and it cannot be changed. The built-in terminal board with the figure marking corresponding to the wiring diagram on the apparatus cover, serves for external connection of conductors.
Connecting the control voltage the check of name-plate data is recommended.
The magnet core of under-voltage release, if any, must be fixed in position during the hand check of the correct operation of the drive and after the finishing of the check, the catch is released.
Checking the correct function of the apparatus, several stretching operations of the spring are carried out first by hand and then by means of the motor.

2. Maintenance

The maintenance of the drive is carried out in the same time as in the case of circuit breaker – i.e. at least once in a year. Reliability of the drive depends on the cleanliness (dust, corrosion) and lubrication.

It is forbidden to operate the drive without load (in the absence of circuit breaker) as some parts can be damaged. Petrol or kerosene can be used for impurity removal from the details, and these must be wipped, off by means of clean and dry rag. The efficiency of the lubrication is increased by regular treatment, but superfluous lubrication can impair the correct operation of the drive.
The chain wheel and the chain must be greased.

Neutral vaseline oil is used for:

- bearing surfaces of rollers and their pivots
- pivots of levers, rods and return springs

The oil level in gear box of BLRM drive is checked by means of side filling plug. The dirty oil is drained-off by means of the discherge plug placed on the bottom of the box.

During the regular maintenance the following works can be carried out:

- to tighten the conductors of the control circuits
- to check the correct operation of auxiliary switches and relays
- to inspect the motor brushes
- to check the dowelled joints of levers and and rods to tighten the screws and nuts.

2.1 Magnet coil replacement.

The conductors are disconnected from the coil. The bottom holder of the magnet is removed, the coil is replaced and reconnected. Replacing two magnets the upper holder must be dismounted too. In this case the holder must be placed in the original position and secured by means of the pin.

1974
EJF Brno – OTS
Tisk 51 - 318/74